YEOSHE

Hydraulic Piston Pump

PV Series

www.yeoshehydraulic.com

Efficient Performance

Innovative Technology

Reliable Quality and Service

YEOSHE HYDRAULICS CO.,LTD.

PV Axial piston pump

PV Series axial piston pump

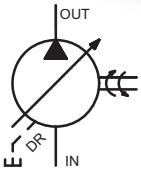

nominal pressure : 350 bar
max. pressure : 420 bar

1.New type of swash plate and large servo piston with strong bias spring achieves fast response, reduce the noise due to active decompression of system at down stroke.

2.Nine pistons and new precompression technology (precompression filter volume) result in unbeaten low outlet flow pulsation.

3.Complete compensator program offers multiple controls.

4.Rigid and FEM-optimized body design for lowest noise level.

5.Thru drive for 100% nominal torque.

6.Pump combinations (multiple pumps) of same size and model and mounting interface for basically all metric or SAE mounting interfaces.

7.Wide application in automobile industrial, ships, forging machines, tire machines, injection molding machines, machine tools, special-purpose machine.

Quick Reference Data Chart

Size	Model	Pressure		Displacement		Pump Delivery (7 bar) 100 PSI				APPROX. Noise Levels			Speed		Weight
		nominal pressure	max. pressure	cm³/rev	In³/rev	1500 RPM		1800 RPM		dBA Full Flow and 1500 RPM			Max. RPM	Min. RPM	KG (LB)
						LPM	U.S. GPM	LPM	U.S. GPM	70 bar (1 KSI)	207 bar (3 KSI)	343 bar (5 KSI)			
1	PV016	350	420	16	0.98	24	6.3	28.8	7.6	56	60	68	2750	300	19 (42)
	PV020			20	1.2	30	7.9	36	9.5						
	PV023			23	1.4	34.5	9.1	41.4	10.9						
	PV028	280	350	28	1.7	42	11	50.4	13.2						
2	PV032	350	420	32	1.9	48	12.7	57.6	15.2	59	62	69	2400		30 (66)
	PV040			40	2.4	60	15.9	72	19						
	PV046			46	2.8	69	18.2	82.2	21.9						
	PV056	280	350	56	3.41	84	22.1	100.8	26.6						
	PV065	250	315	65	3.96	97.5	25.7	117	30.9						
3	PV063	350	420	63	3.8	94.5	25	113.4	30	66	70	74	2100		60 (132)
	PV071			71	4.3	107	28.3	128.7	34				2100		
	PV080			80	4.8	120	31.7	144	38				2000		
	PV092			92	5.6	138	36.5	165.6	43.8				1900		
	PV110	250	280	110	6.7	165	43.6	198	52.3				1900		
4	PV125	350	420	125	7.6	187.5	49.5	225	59.4	70	74	76	2200		90 (198)
	PV140			140	8.5	210	55.5	252.1	66.6						
	PV180			180	11	270	71.3	324	85.6	71	75	77			
	PV210	250	280	210	12.8	315	83	378	99.8	73	77	79	2100		
5	PV270	350	420	270	16.5	405	107	486	128.4	77	79	89	1800		172 (379)

1.Outlet port is on the top, the pipe pressure should be less than 2 bar.
2.The usage of max. Pressure for each circle never exceed 6 seconds. Please see the General Installation Information for hydraulic oil clealiness manual.
3.YEOSHE offers tandem pump or other types of pump connection. The mounting has Metric and SAE dimensions.

Type code for standard program

PV	063	GA	3	R	M	1	A	0	N	
1	2	3	4	5	6	7	8	9	10	11
Series	Size and displacement	Control device	Pressure adjusting	Rotation	Mounting	Threads	Thru drive & 2nd pump	Voltage	Seals	Design No.

E
4

Horse power
for horse power control ("P" prefix)

Series

1	Axial piston pump variable displacement high pressure version	nominal pressure：350 bar max. pressure：420 bar	PV

Size and displacement

2	Code		016	020	023	028	032	040	046	056	065	063	071	080	092	110	125	140	180	210	270
	Size		Body 1				Body 2					Body 3					Body 4				Body 5
	Displacement	cm^3/ rev	16	20	23	28	32	40	46	56	65	63	71	80	92	110	125	140	180	210	270
		In^3/ rev	0.98	1.2	1.4	1.7	1.9	2.4	2.8	3.41	3.96	3.8	7.3	4.8	5.6	6.6	7.6	8.5	11	12.6	16.5

Control device

3	Standard pressure compensator	A0
	None pressure compensator (fixed displacement) (pressure protection required)	LN
	Electrical 2-stage flow compensator (pressure protection required)	LS
	Fixed displacement 2-stage flow compensator (pressure protection required)	LC
	Remote type	
	Remote pressure compensator with NG6 interface	GM
	Remote pressure compensator + Relief valve	GA
	Remote pressure compensator + Proportional pressure valve	GJ
	Electrical unloading type	
	Remote pressure compensator + Electrical unloading	GR
	Remote pressure compensator + 2-stage pressure control	GB
	Remote pressure compensator + Electrical unloading + 2-stage pressure control	GC
	Load-sensing type	
	Load-sensing compensator with NG6 interface	HM
	Load-sensing compensator + Relief valve	HA
	Load-sensing compensator + Proportional pressure valve	HJ
	Load-sensing + Electrical unloading type	
	Load-sensing compensator + Electrical unloading	HR
	Load-sensing compensator + 2-stage pressure control	HB
	Load-sensing compensator + Electrical unloading + 2-stage pressure control	HC
	Proportional pressure, flow type	
	Load-sensing compensator + Proportional flow valve + Relief valve	HQ
	Load-sensing compensator + Proportional pressure valve + Proportional flow valve	HK
	Horse power type	
	Horse power compensator with NG6 interface	PM
	Horse power compensator + Relief valve	PA
	Horse power compensator + Proportional pressure valve	PJ
	Horse power compensator + Electrical unloading	PR
	Horse power compensator + Electrical unloading+2-stage pressure control	PC
	Horse power load-sensing compensator + Relief valve	PH
	Horse power load-sensing compensator + Proportional flow valve + Relief valve	PQ
	Horse power load-sensing compensator + Proportional pressure valve	PS

Type code for standard program

YEOSHE

PV	063	GA	3	R	M	1	A	0	N	
1	2	3	4	5	6	7	8	9	10	11
Series	Size and displacement	Control device	Pressure adjusting	Rotation	Mounting	Threads	Thru drive & 2nd pump	Voltage	Seals	Design No.

E
4

Horse power
for horse power control ("P" prefix)

Pressure adjustment

4	10~140 bar (145~2030 PSI)	2
	35~250bar (507~3625 PSI)	3
	40~280bar (580~4060 PSI)	4
	50~315bar (725~4567 PSI)	5
	70~350bar (1015~5075 PSI)	6

Pressure range for each displacement:

		2	3	4	5	6
4	PV016~PV023	■	■	■	■	■
	PV028	■	■	■	-	-
	PV032~PV046	■	■	■	■	■
	PV056	■	■	■	-	-
	PV065	■	■	-	-	-
	PV063~PV092	■	■	■	■	■
	PV110	■	■	-	-	-
	PV125~PV180	■	■	■	■	■
	PV210	■	■	■	-	-
	PV270	■	■	■	■	■

Pressure range for each control device:

		2	3	4	5	6
4	A0 Standard pressure compensator	■	■	■	■	■
	LN None pressure compensator (fixed displacement) (pressure protection required)	■	■	■	■	■
	LS Electrical 2-stage flow compensator (pressure protection required)	■	■	■	■	■
	LC Fixed displacement 2-stage flow compensator (pressure protection required)	■	■	■	■	■
	Remote type					
	GM Remote pressure compensator with NG6 interface	■	■	■	■	■
	GA Remote pressure compensator + Relief valve	■	■	■	■	■
	GJ Remote pressure compensator + Proportional pressure valve	■	■	-	-	-
	Electrical unloading type					
	GR Remote pressure compensator + Electrical unloading	■	■	■	■	■
	GB Remote pressure compensator + 2-stage pressure control	■	■	■	■	■
	GC Remote pressure compensator + Electrical unloading + 2-stage pressure control	■	■	■	■	■
	Load-sensing Type					
	HM Load-sensing compensator with NG6 interface	■	■	■	■	■
	HA Load-sensing compensator + Relief valve	■	■	■	■	■
	HJ Load-sensing compensator + Proportional pressure valve	■	■	-	-	-

■ = available - = on request ※ = standard type

Type code for standard program

PV	063	GA	3	R	M	1	A	0	N	
1	2	3	4	5	6	7	8	9	10	11
Series	Size and displacement	Control device	Pressure adjusting	Rotation	Mounting	Threads	Thru drive & 2nd pump	Voltage	Seals	Design No.

E
4

Horse power
for horse power control ("P" prefix)

Pressure range for each control device:

		2	3	4	5	6
4	**Load-sensing + Electrical unloading type**					
	HR Load-sensing compensator + Electrical unloading	■	■	■	■	■
	HB Load-sensing compensator + 2-stage pressure control	■	■	■	■	■
	HC Load-sensing compensator + Electrical unloading + 2-stage pressure control	■	■	■	■	■
	Proportional pressure, flow type					
	HQ Load-sensing compensator + Proportional flow valve + Relief valve	■	■	■	■	■
	HK Load-sensing compensator + Proportional pressure valve + Proportional flow valve	■	■	-	-	-
	Horse power type					
	PM Horse power compensator with NG6 interface	■	■	■	■	■
	PA Horse power compensator + Relief valve	■	■	■	■	■
	PJ Horse power compensator + Proportional pressure valve	■	■	-	-	-
	PR Horse power compensator + Relief valve + Electrical unloading	■	■	■	■	■
	PC Horse power compensator + Electrical unloading +2-stage pressure control	■	■	■	■	■
	PH Horse power load-sensing compensator + Relief valve	■	■	■	■	■
	PQ Horse power load-sensing compensator + Proportional flow valve + Relief valve	■	■	■	■	■
	PS Horse power load-sensing compensator + Proportional pressure valve	■	■	-	-	-

Pressure adjusting (Please following page A-34~36)

	Displacement	Horse power
4	PV016~PV023,28	A 3KW B 4KW C 5.5KW D 7.5KW E 11KW
	PV032~PV046,56,65	C 5.5KW D 7.5KW E 11KW F 15KW G 18.5KW H 22KW
	PV063~PV092,110	E 11KW F 15KW G 18.5KW H 22KW I 30KW J 37KW K 45KW
	PV125,140	G 18.5KW H 22KW I 30KW J 37KW K 45KW L 55KW
	PV180,210	H 22KW I 30KW J 37KW K 45KW L 55KW M 75KW N 90KW
	PV270	J 37KW K 45KW L 55KW M 75KW N 90KW O 110KW P 132KW

Rotation

5	Clockwise	R
	Counter clockwise	L

■ = available - = on request ※ = standard type

Type code for standard program

YEOSHE

PV	063	GA	3	R	M	1	A	0	N	
1	2	3	4	5	6	7	8	9	10	11
Series	Size and displacement	Control device	Pressure adjusting	Rotation	Mounting	Threads	Thru drive & 2nd pump	Voltage	Seals	Design No.

E
4

Horse power for horse power control ("P" prefix)

Mounting

	Mounting \ Body		1	2	3	4	5
6	Metric	Parallel keyed	M R (A-44)	M R (A-52)	M R (A-60)	M R Q (A-67)	M R (A-75) △ A B (A-77)
		Splined	K S (A-44)	K S P (A-52)	K S (A-60)	K S P (A-67)	K S (A-74)
	Inch	Parallel keyed	N J (A-46)	N J (A-54)	N J (A-62)	N J F (A-69)	N J (A-76)
		Splined	D U (A-46)	D U G (A-54)	D U (A-62)	D U G (A-69)	D U (A-76)

(Dimensions refer to dimension diagram)

Threads

7	BSPP (G)	1	※
	PT (RC)	2	
	UNF (SAE)	3	
	ISO 6149 (M)	7	

Thru drive & 2nd pump

	Displacement	Code
8	PV016~PV270	A Single pump B Prepared for thru drive
	PV016~PV023,28	C D E I J K
	PV032~PV046,56,65	D E F I J K L
	PV063~PV092,110	D E F G I J K L M
	PV125~PV180,210	D E F G J K L M
	PV270	D E F G H J K L M N

Size

8	SAE AA, Ø50.8 mm	C
	SAE A, Ø82.55 mm	D
	SAE B, Ø101.6 mm	E
	SAE C, Ø127 mm	F
	SAE D, Ø152.4 mm	G
	SAE E, Ø165.1 mm	H
	Metric, Ø63 mm	I
	Metric, Ø80 mm	J
	Metric, Ø100 mm	K
	Metric, Ø125 mm	L
	Metric, Ø160 mm	M
	Metric, Ø200 mm	N

Other pumps are acceptable to order

■ = available – = on request ※ = standard type △ = custom made

Type code for standard program

PV	063	GA	3	R	M	1	A	0	N	
1	2	3	4	5	6	7	8	9	10	11
Series	Size and displacement	Control device	Pressure adjusting	Rotation	Mounting	Threads	Thru drive & 2nd pump	Voltage	Seals	Design No.

E
4

Horse power
for horse power control ("P" prefix)

Voltage

9	None	0
	AC100V (50/60HZ)	A
	AC110V (60HZ)	B
	AC200V (50/60HZ)	C
	AC220V (60HZ)	D
	DC 12V	E
	DC 24V	F

Seals

10	NBR	N	※
	VITON, FKM	V	
	Ethylen-propylene	E	

■ = available – = on request ※ = standard type

Pressure & Flow Adjustment

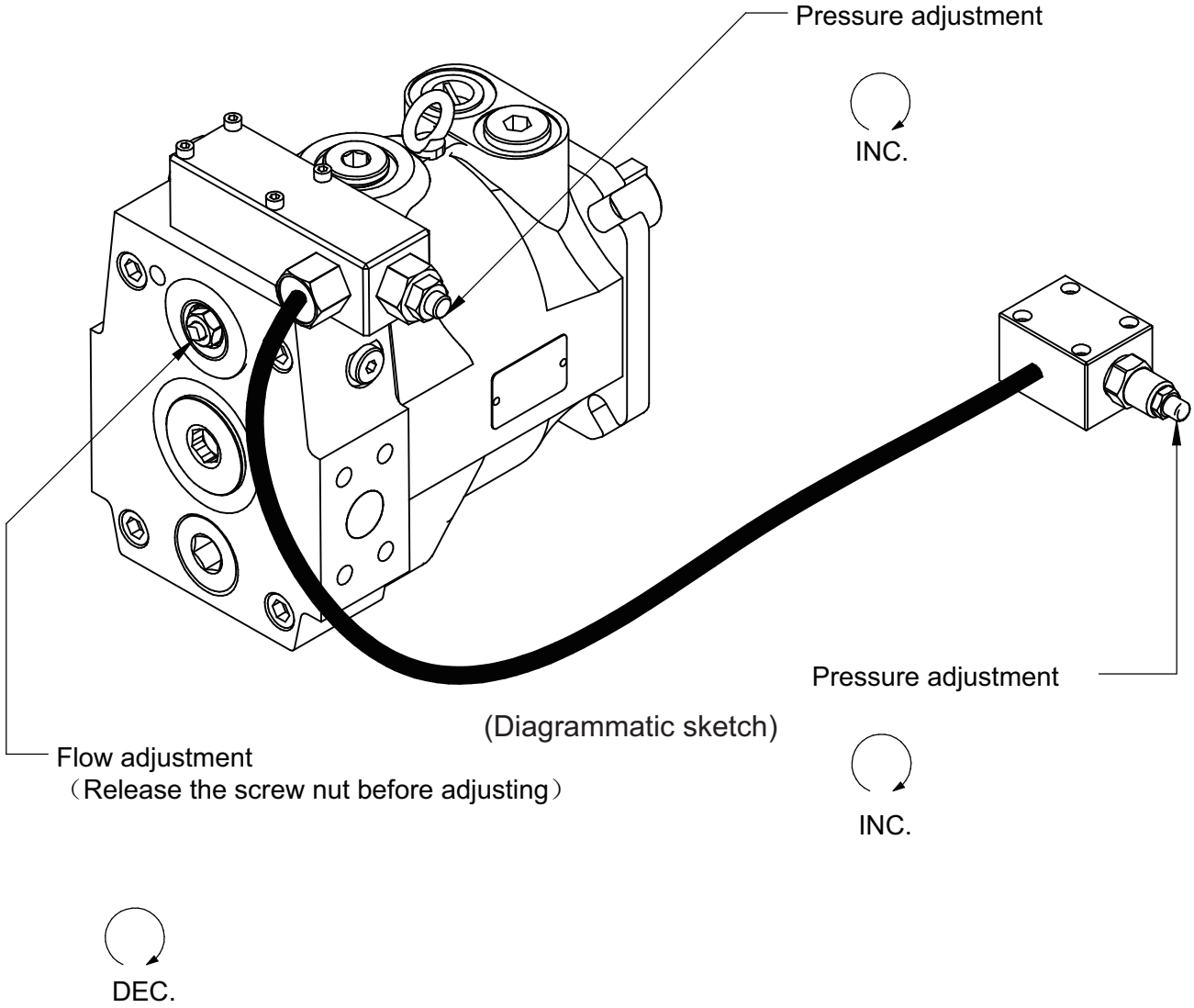

(Diagrammatic sketch)

A0 Standard pressure compensator

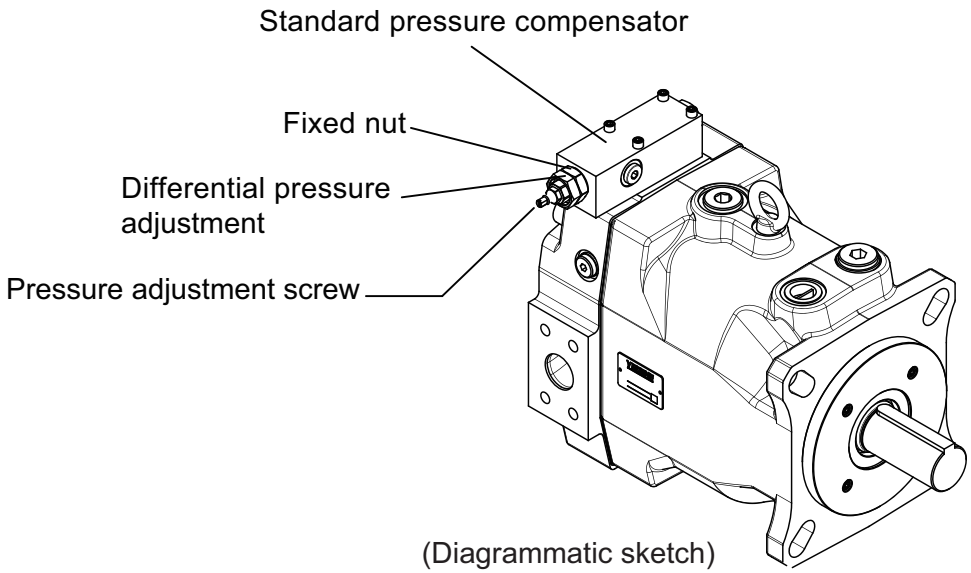

(Diagrammatic sketch)

A0 Standard pressure compensator

The standard pressure compensator adjusts the pump displacement according to the actual need of the system in order to keep the pressure constant.
As long as the system pressure at outlet port P is lower than the set pressure (set as spring preload of the compensator spring) the working port A of the compensator valve is connected to the case drain and the piston area is unloaded. Bias spring and system pressure on the annulus area keep the pump at full displacement.
When the system pressure reaches the set pressure the compensator valve spool connects port P1 to A and builds up a pressure at the servo piston resulting in a downstroking of the pump.
The displacement of the pump is controlled in order to match the flow requirement of the system.

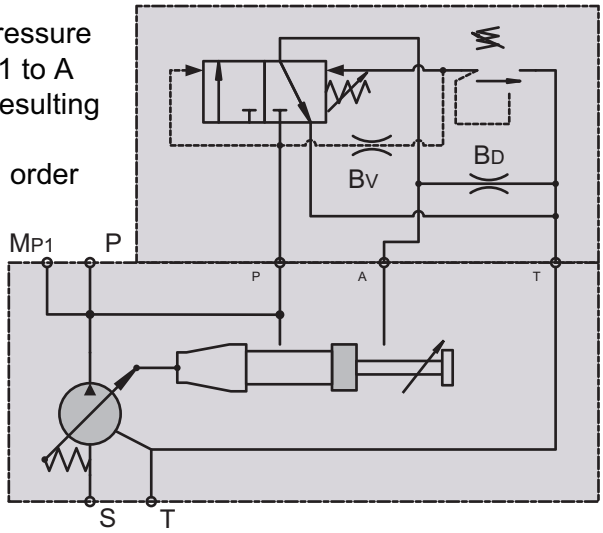

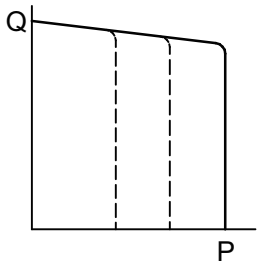

LN None pressure compensator (fixed displacement) (pressure protection required)

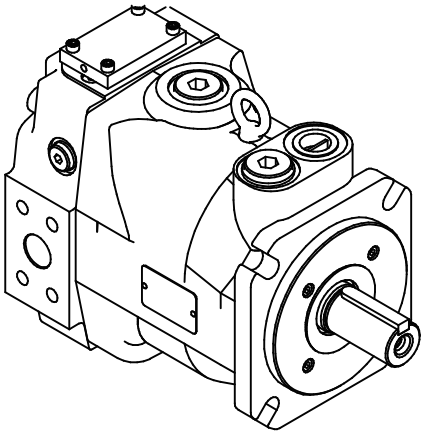

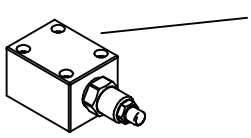

(Diagrammatic sketch)

LN None pressure compensator
(fixed displacement) (pressure protection required)

By using the system under stable displacement and pressure situation, standard pressure compensator can be omitted which helps cost down.

Notice:
External pressure protection is necessarily added at port PM to limit the pressure;otherwise the system pressure will be over high .

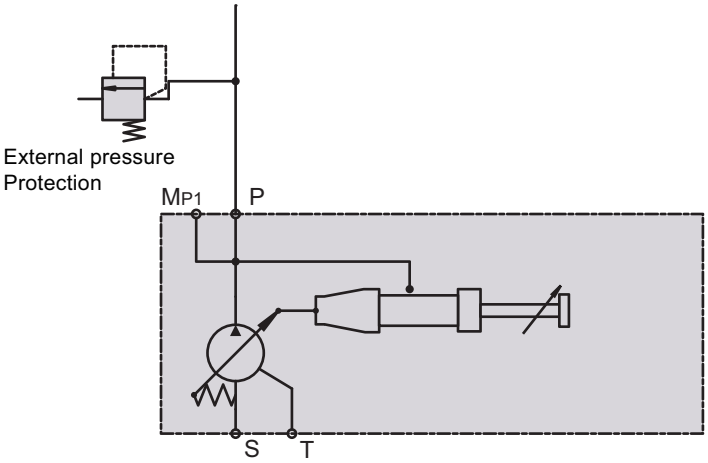

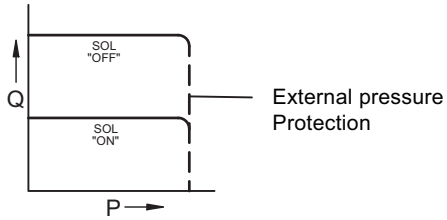

LS Electrical 2-stage flow compensator (pressure protection required)

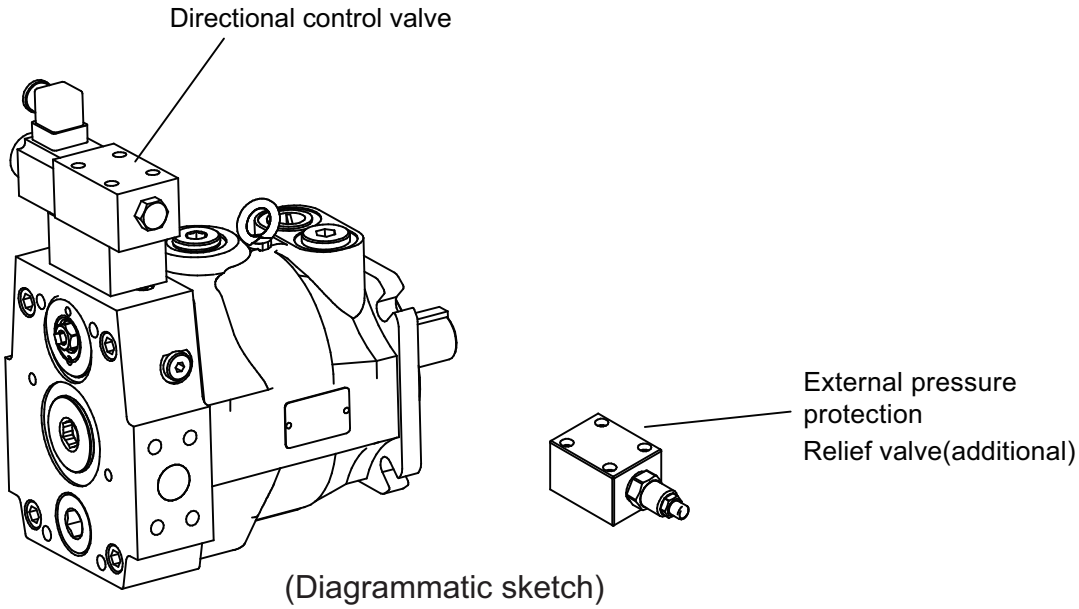

(Diagrammatic sketch)

LS Electrical 2-stage flow compensator
(pressure protection required)

Control the hydraulic circuit change by suing directional control valve.
LS control is applied to two-stage stroke and different speed system.

Notice:
External pressure protection is necessarily added at port PM to limit the pressure; otherwise the system pressure will be over high.

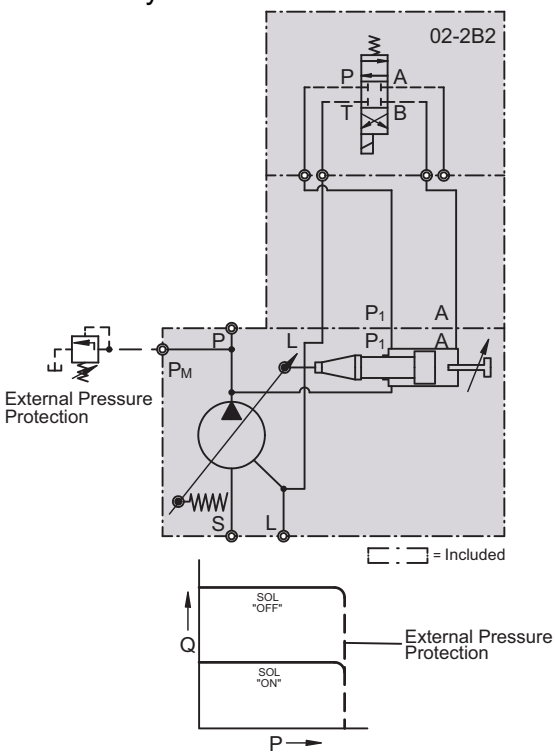

LC Fixed displacement 2-stage flow compensator (pressure protection required)

Fixed displacement 2-stage flow compensator
(pressure protection required)

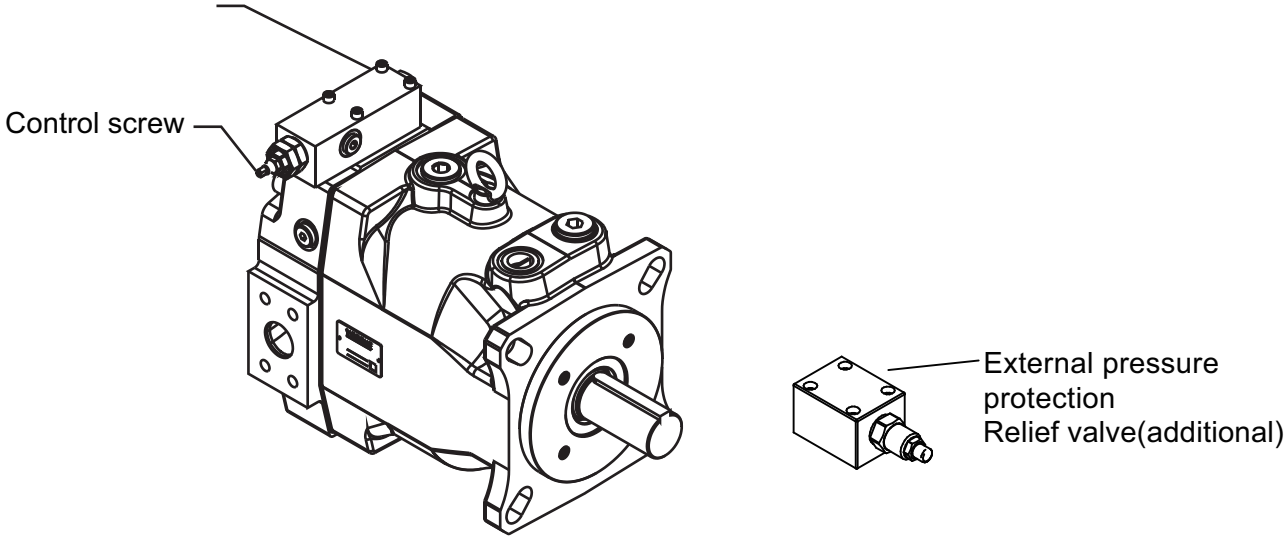

(Diagrammatic sketch)

LC Fixed displacement 2-stage flow compensator
(pressure protection required)

Control the hydraulic circuit change by using the system pressure setting to achieve the switch of big and small flow.
LS control is applied to two-stage stroke and different speed system.

Notice:
External pressure protection is necessarily added at port PM to limit the pressure;otherwise the system pressure will be over high.

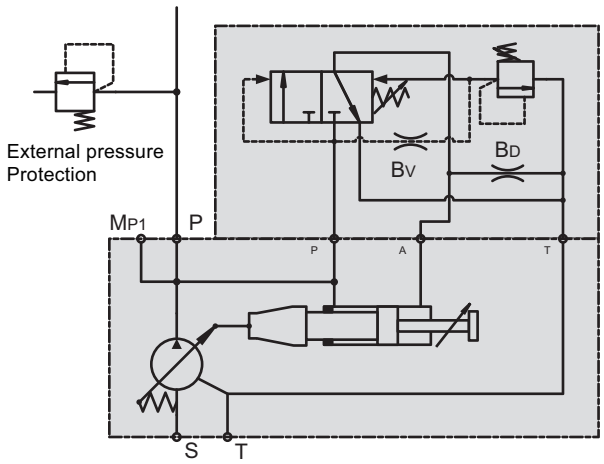

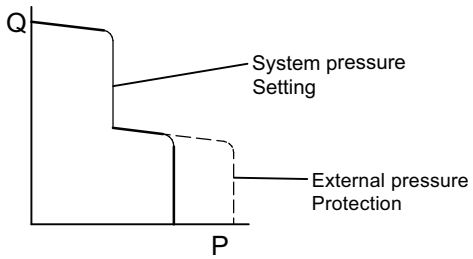

GM Remote pressure compensator with NG6 interface

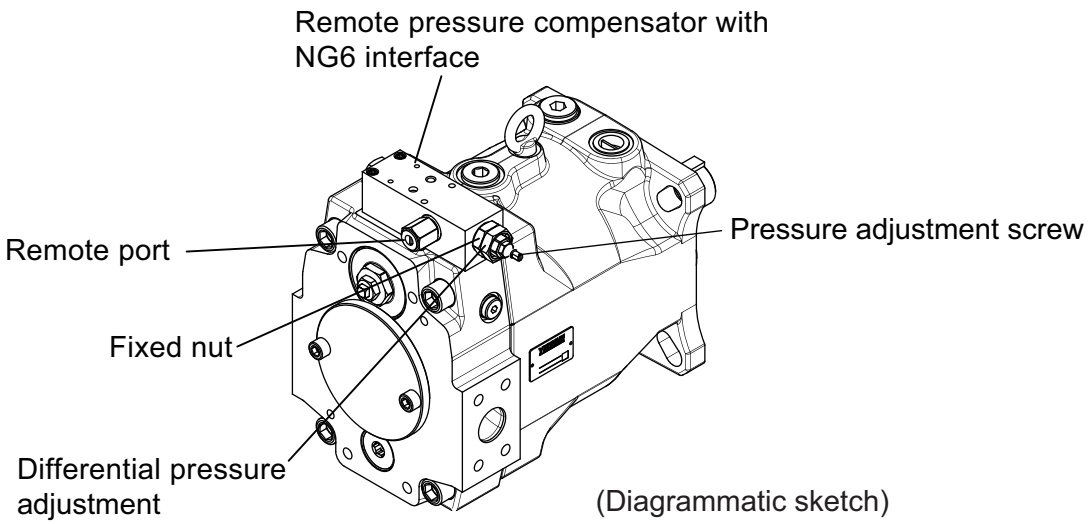

GM Remote pressure compensator with NG6 interface

Version GM of the remote pressure compensator provides on its top side an interface NG6,DIN24340(CETOP 03 at RP35H, NFPA D03) .
This interface allows a direct mounting of a pilot valve. Beside manual or electrohydraulic operated valves, it is also possible to mount complete multiple pressure circuits directly on the compensator body.
YEOSHE offers a variety of these compensator accessories ready to install.
All remote pressure compensator have a factory setting of 15 bar differential pressure.
With this setting, the controlled pressure at the pump outlet is higher than the pressure controlled by the pilot valve.

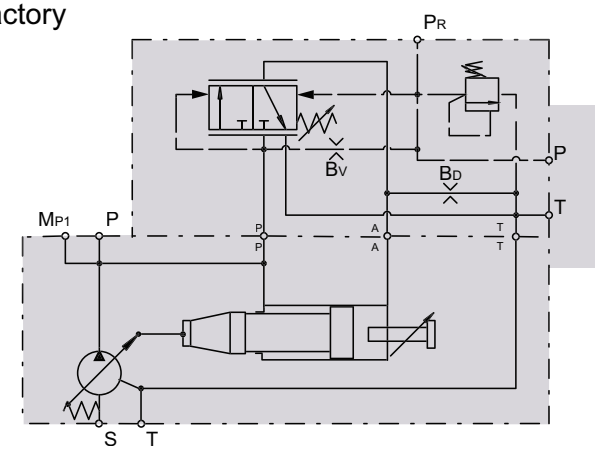

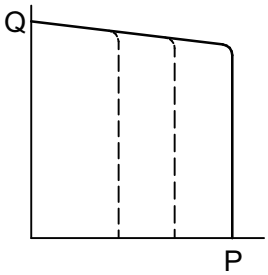

GA Remote pressure compensator + Relief valve

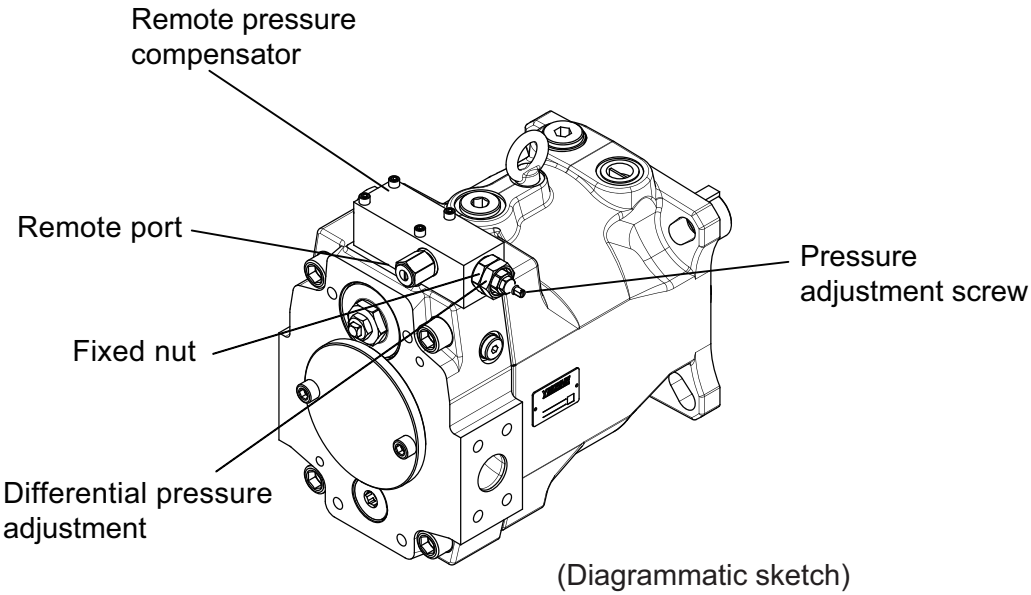

GA Remote pressure compensator + Relief valve

The pressure is set directly at the compensator spring, and the setting of remote pressure compensator can be achieved by any suitable pilot pressure valve connected to pilot port PP.
The pilot valve can be installed remote from the pump in some distance.
That allows pressure setting, e.g. from the control panel of the machine. The pilot flow supply is internal through the valve spool, and the pilot flow is 1~1.5 L/min.

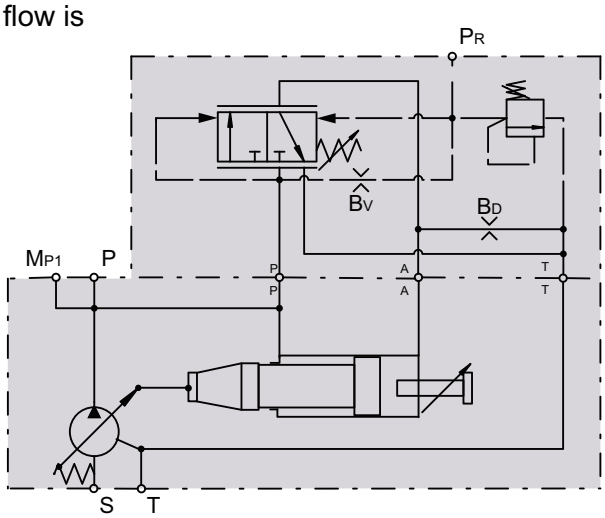

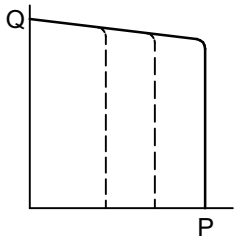

GJ Remote pressure compensator + Proportional pressure valve

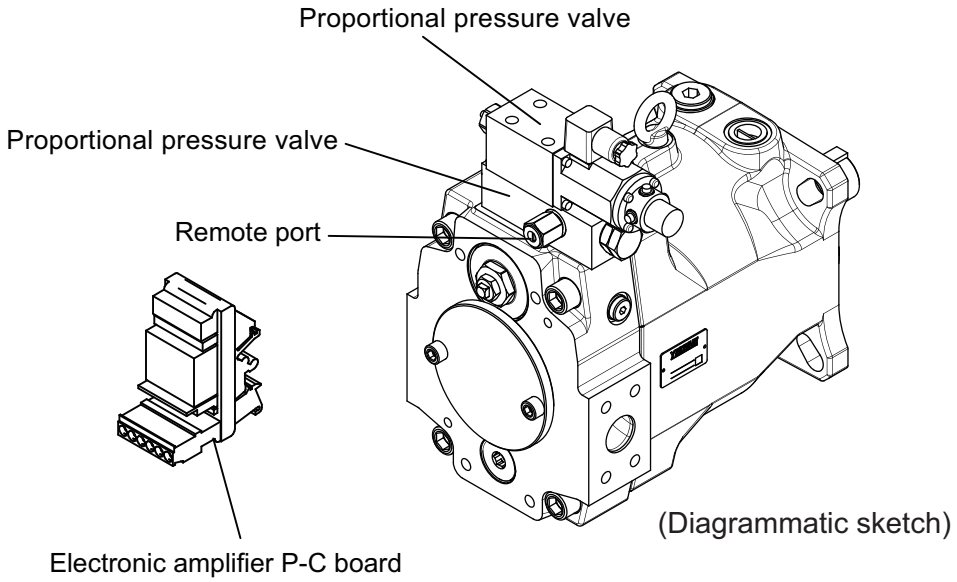

GJ Remote pressure compensator
+ Proportional pressure valve

Fulfill the actual displacement and maintain the preset system pressure.
By adding YEOSHE proportional pressure valve, electrical proportional pressure control is available.

※Proportional pressure max.250 bar.
If needing any other pressure range, please contact YEOSHE.

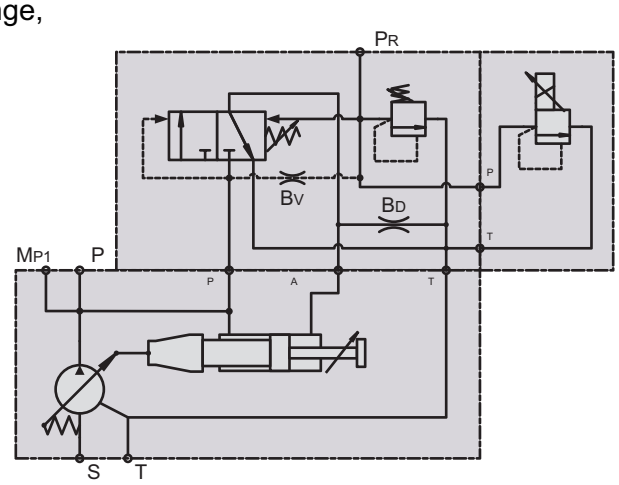

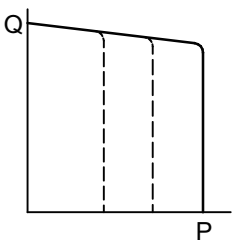

GR Remote pressure compensator + Electrical unloading

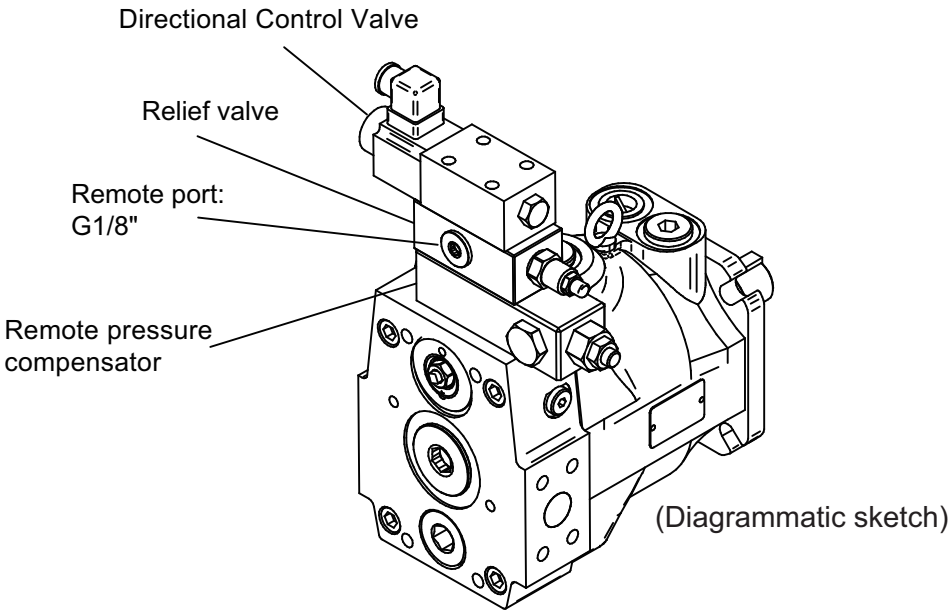

GR Remote pressure compensator + Electrical unloading

By adding a relief valve and a directional control valve on the compensator makes the pump have both function.
GR control is for long unloading situation.
When the system stops, oil temperature and noise maintain low level while being through the unloading.

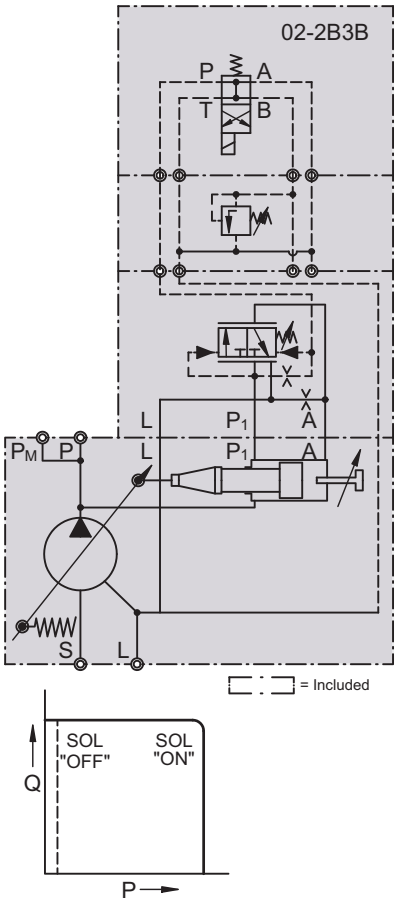

GB Remote pressure compensator + 2-stage pressure control

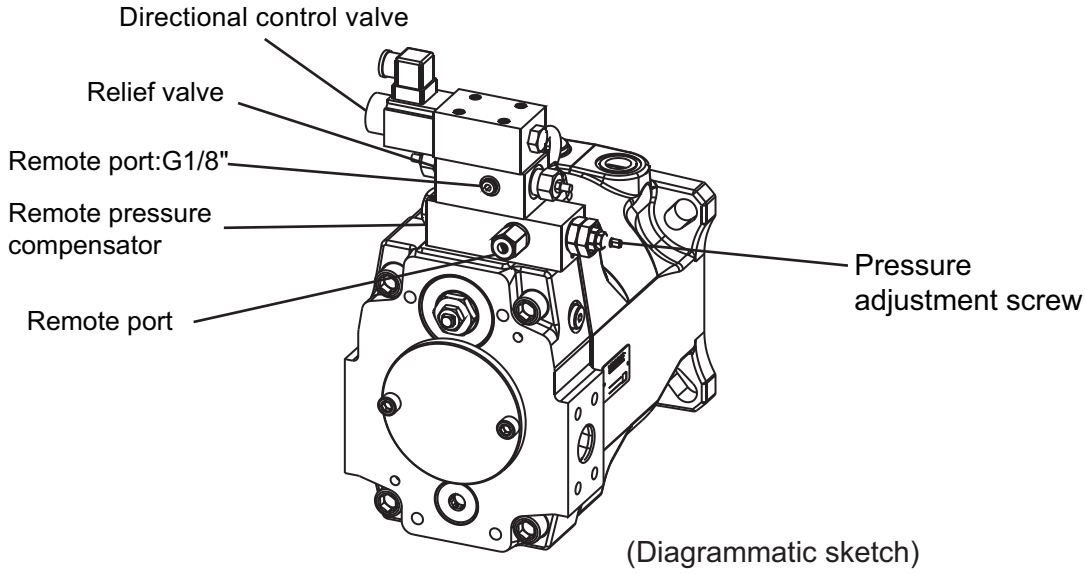

GB Remote pressure compensator
+ 2-stage pressure control

By adding a relief valve and directional control valve on the compensator makes it adjust two different stage limited pressure.
GB control is for two-stage working pressure under the constant cylinder speed.

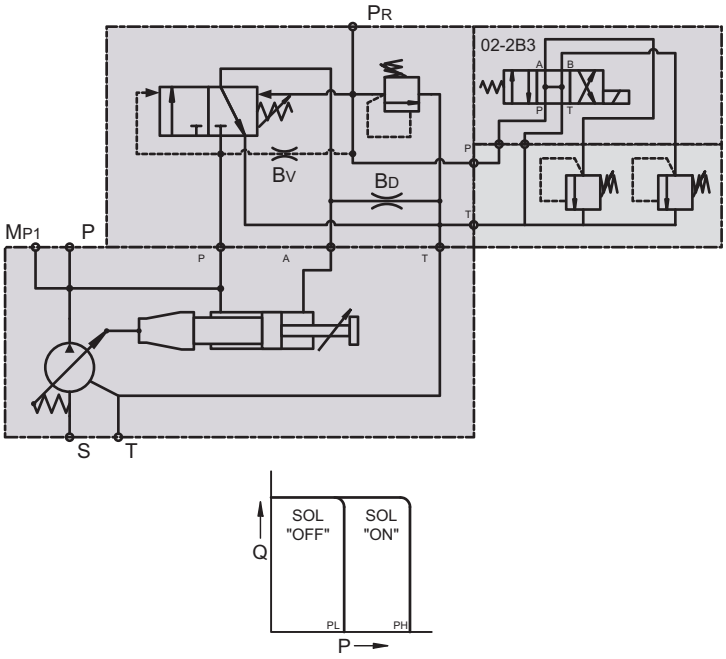

Either PL or PH valve can be high pressure side.

GC Remote pressure compensator + Electrical unloading + 2-stage pressure control

YEOSHE

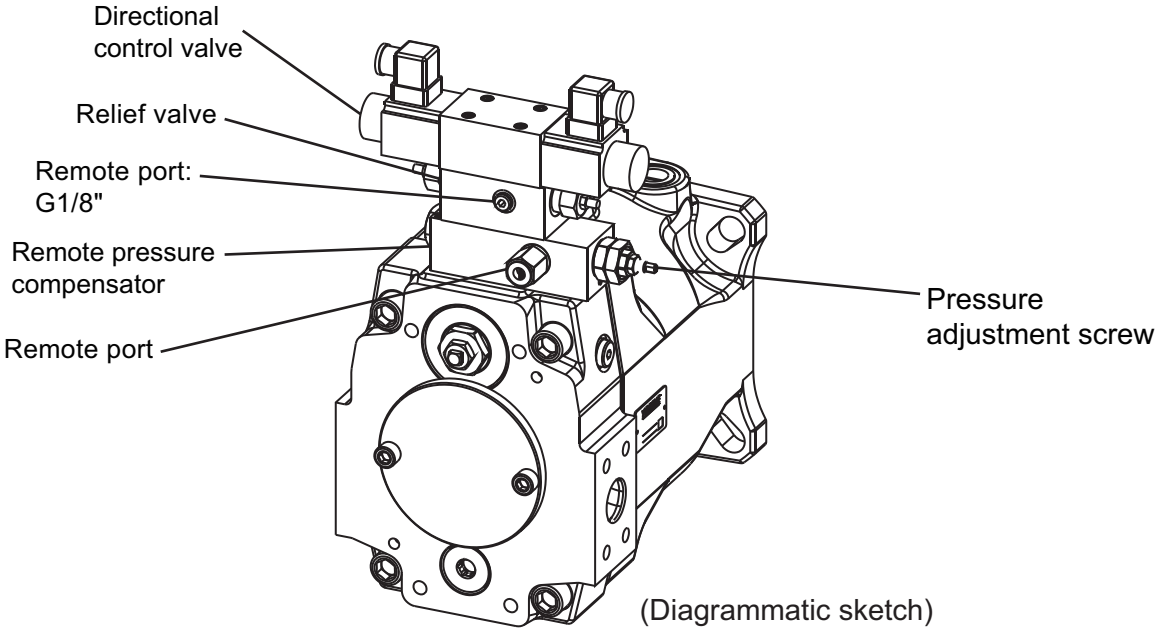

(Diagrammatic sketch)

GC Remote pressure compensator + Electrical unloading + 2-stage pressure control

Control two different-stage limited pressure by adding directional control valve, and unloading function.
When the system stops, oil temperature and noise maintain low level by unloading function.
Usable for stable cylinder speed, two-stage pressure, and long unloading situation.

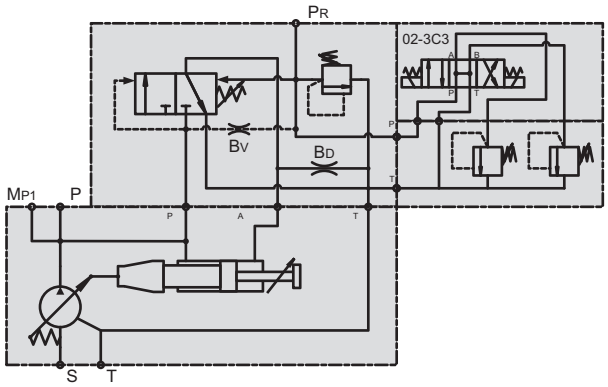

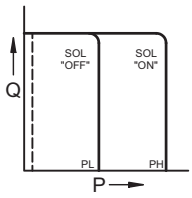

Either PL or PH valve can be high pressure side.

HM Load-sensing compensator with NG6 interface

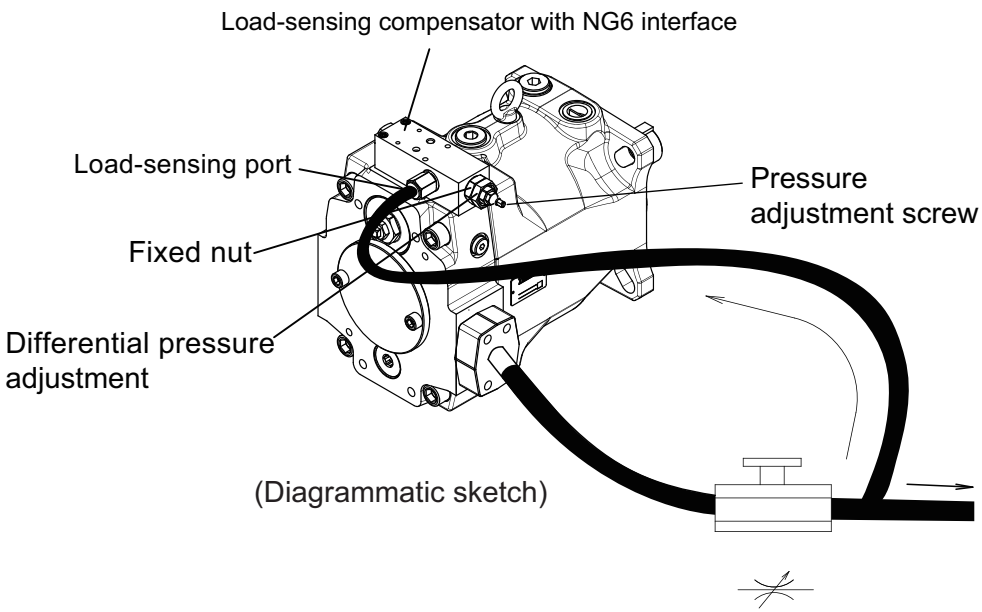

HM Load-sensing compensator with NG6 interface

Version HM of remote pressure compensator provides an interface NG6 on its top side.
The load-sensing compensator has an external pilot pressure supply.
Factory setting for the differential pressure is 10 bar.
The input signal to the compensator is the differential pressure at the main stream resistor.
A load-sensing compensator represents mainly a flow control for the pump output flow, because the compensator keeps the pressure drop at the main stream resistor constant.
A variable input speed or a varying load (-pressure)has consequently no influence on the output flow of the pump and the speed of the actuator.
By adding YEOSHE proportional pressure valve, electrical proportional pressure control is available.

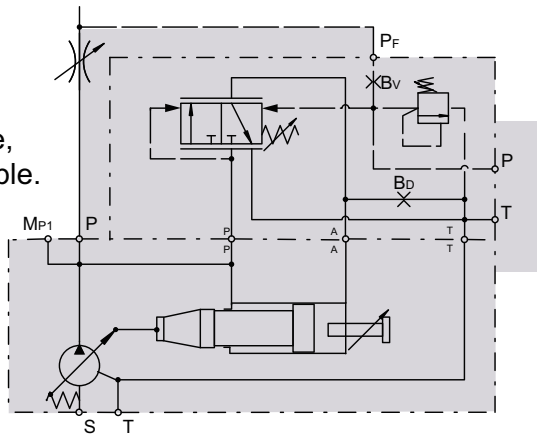

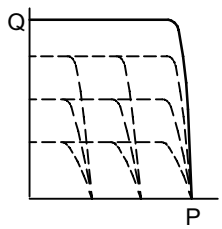

HA Load-sensing compensator + Relief valve

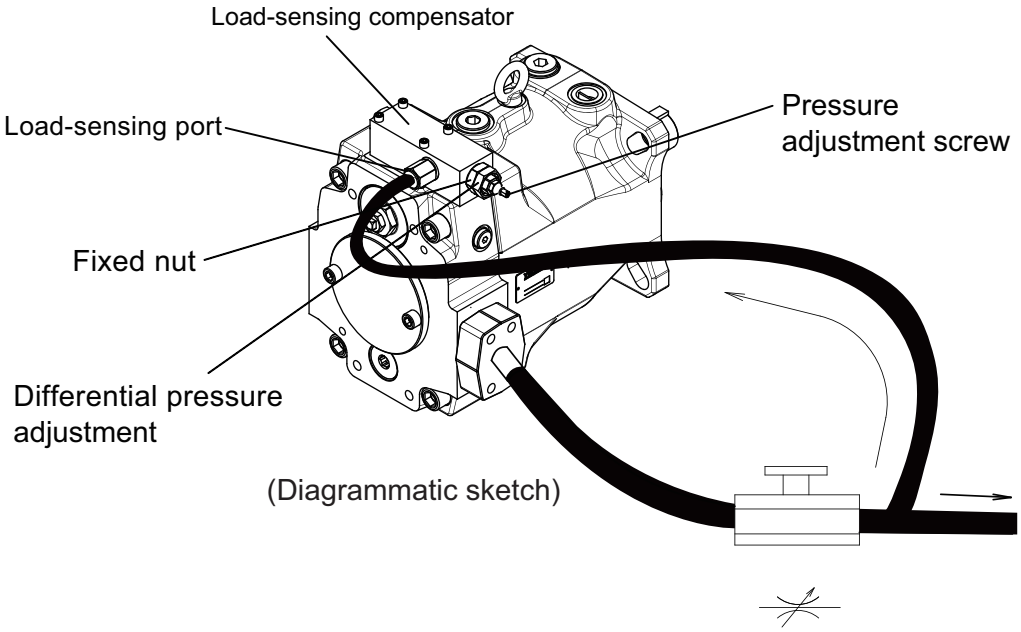

HA Load-sensing compensator + Relief valve

The load-sensing compensator has an external pilot pressure supply.
Factory setting for the differential pressure is 10bar.
The input signal to the compensator is the differential pressure at the main stream resistor.
A load-sensing compensator represents mainly a flow control for the pump output flow, because the compensator keeps the pressure drop at the main stream resistor constant.
A variable input speed or a varying load(-pressure) has consequent no influence on the output flow of the pump and the speed of the actuator.
Relief valve has adjustment function.
The pilot valve can be installed remote form the pump in some distance.
That allows pressure setting, e.g. form the control panel of the machine.
The pilot flow supply is internal through the valve spool, and the pilot flow is 1-1.5 L/min.

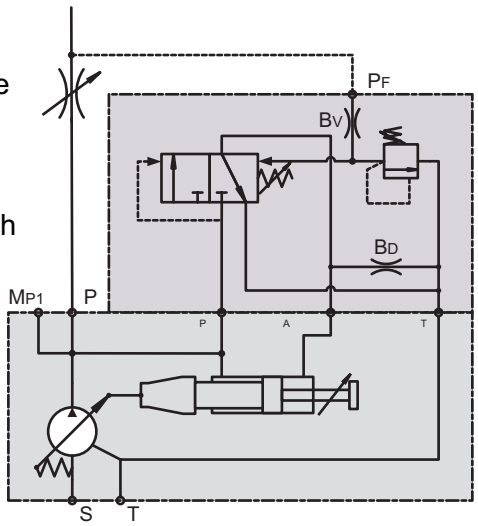

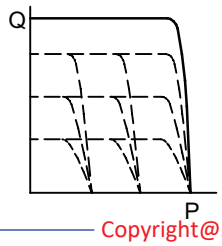

HJ Load-sensing compensator + Proportional pressure valve

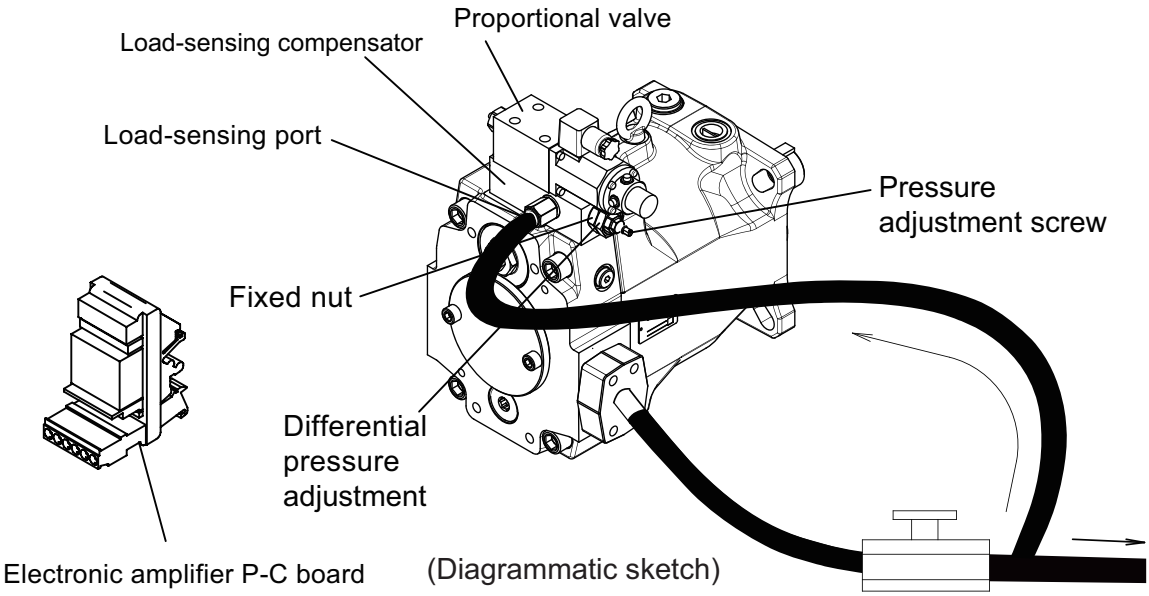

(Diagrammatic sketch)

HJ Load-sensing compensator
+ Proportional pressure valve

The load-sensing compensator has an external pilot pressure supply.
Factory setting for the differential pressure is 10bar.
The input signal to the compensator is the differential pressure at the main stream resistor.
A load-sensing compensator represents mainly a flow control for the pump output flow and the speed of the actuator.
Proportional pressure valve is for electrical proportional pressure control.

※Proportional pressure max.250 bar.
If needing any other pressure range, please contact YEOSHE.

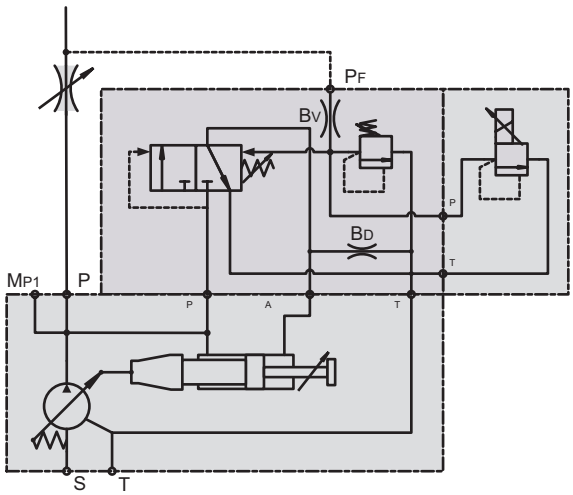

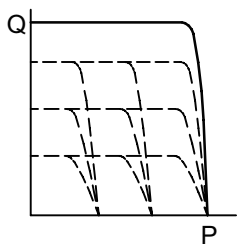

HR Load-sensing compensator + Electrical unloading

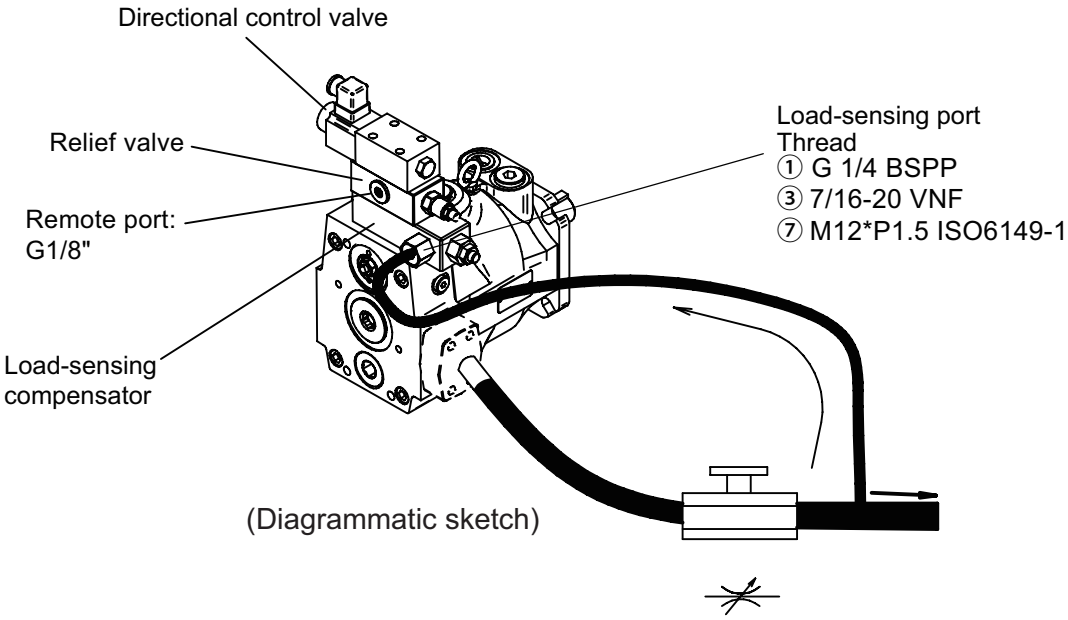

HR Load-sensing compensator + Electrical unloading

The load-sensing compensator has all external pilot pressure supply.
Factory setting for the differential pressure is 10bar.
The input signal to the compensator is the differential pressure at the main stream resistor.
A load-sensing compensator represents mainly a flow control for the pump output flow, because the compensator keeps the pressure drop at the main stream resistor constant.
A variable input speed or a varying (load -pressure) has consequently on the output flow of the pump and speed of the actuator.
By adding a pilot orifice (Φ0.8mm) and a pressure pilot valve pressure compensation can be added to the flow control function. See the circuit diagram left.
By adding a relief valve and a directional control valve on the compensator makes the pump have both function.
HR control is for long unloading situation.
When the system stops, oil temperature and noise maintain low level while being through the unloading.

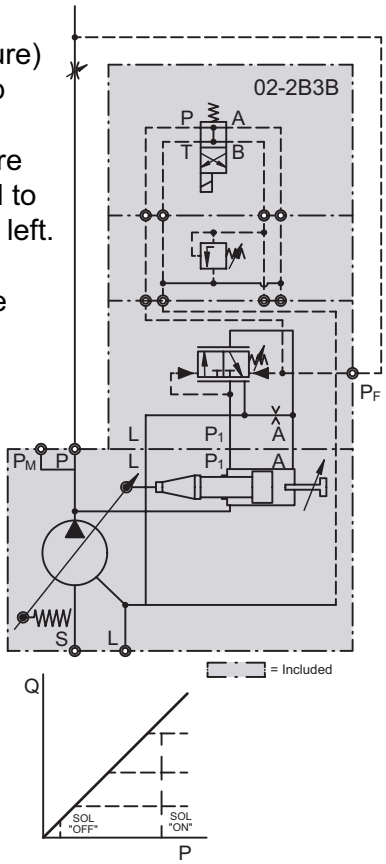

HB Load-sensing compensator + 2-stage pressure control

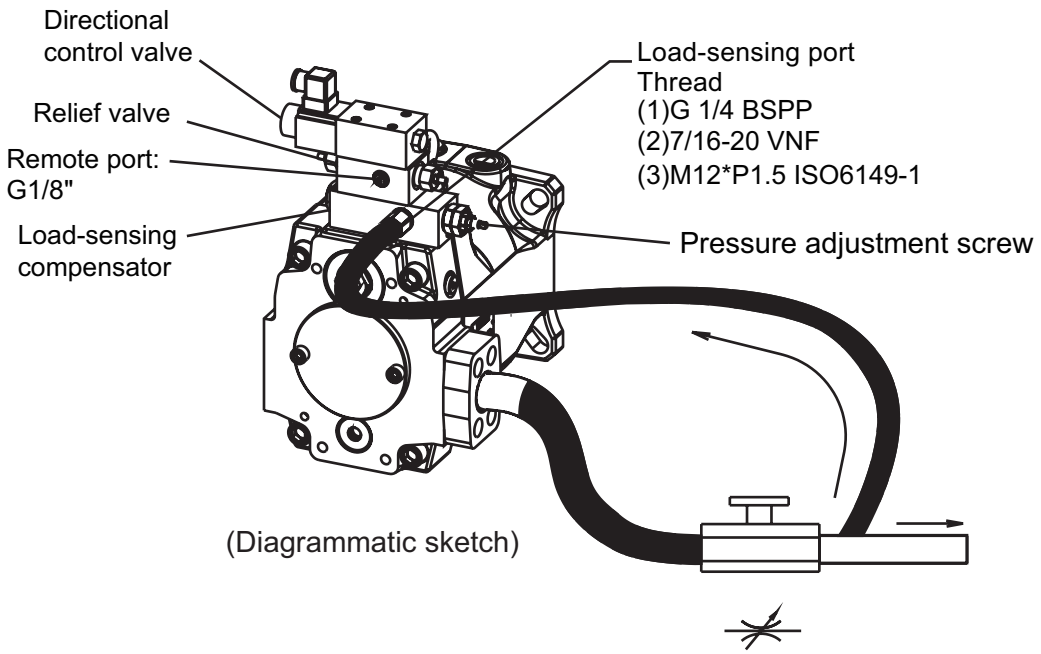

HB Load-sensing compensator
+ 2-stage pressure control

The load-sensing compensator has an external pilot pressure supply.
Factory setting for the differential pressure is 10bar.
The input signal to the compensator is the differential pressure at the main stream resistor.
A load-sensing compensator represents mainly a flow control for the pump output flow, because the compensator keeps the pressure drop at the main stream resistor constant.
A variable input speed or a varying (load -pressure) has consequently on the output flow of the pump and speed of the actuator.
By adding a pilot orifice (Φ0.8mm) and a pressure pilot valve pressure compensation can be added to the flow control function.
See the circuit diagram left.
By adding a relief valve and directional control valve on the compensator makes it adjust two different stage limited pressure.
HB control is for two-stage working pressure under the constant cylinder.

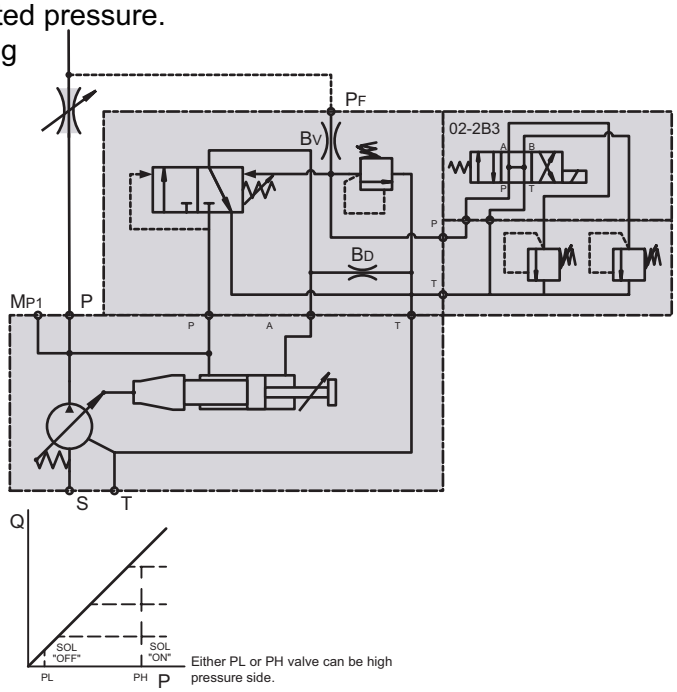

HC Load-sensing compensator + Electrical unloading + 2-stage pressure control

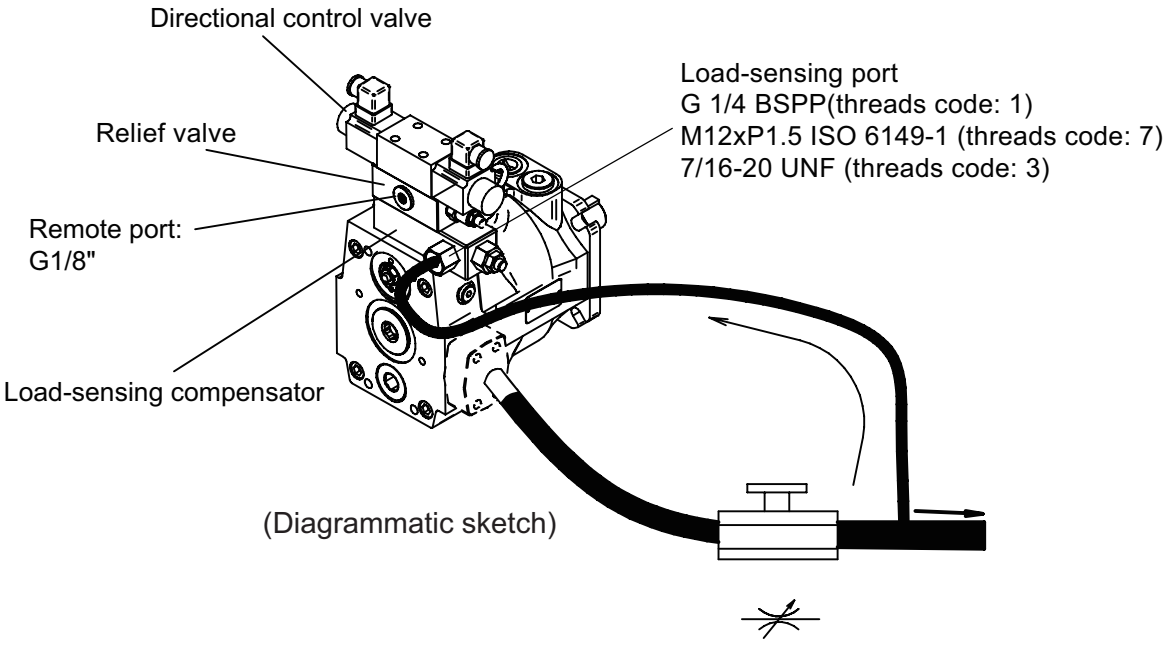

HC Load-sensing compensator
+ Electrical unloading + 2-stage pressure control

The load-sensing compensator has an external pilot pressure supply. Factory setting for the differential pressure is 10bar.
The input signal to the compensator is the differential pressure at the main stream resistor.
A load-sensing compensator represents mainly a flow control for the pump output flow, because the compensator keeps the pressure drop at the main stream
resistor constant.
A variable input speed or a varying (load -pressure) has consequently on the output flow of the pump and speed of the actuator.
By adding a pilot orifice (Φ0.8mm) and a pressure pilot valve pressure compensation can be added to the flow control function.
See the circuit diagram left.
By adding a relief valve and a directional control
valve on the compensator makes the pump have both function.
HC control is for long unloading situation.
When the system stops, oil temperature and noise maintain low level while being through the unloading.

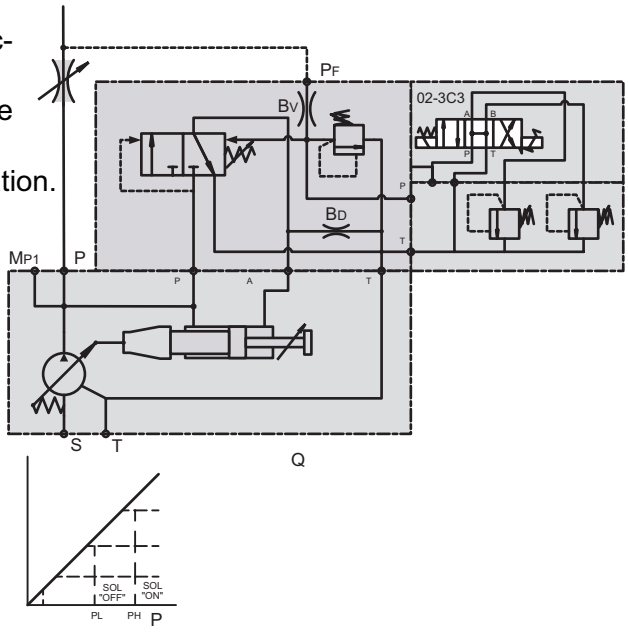

HQ Load-sensing compensator + Proportional flow valve + Relief valve

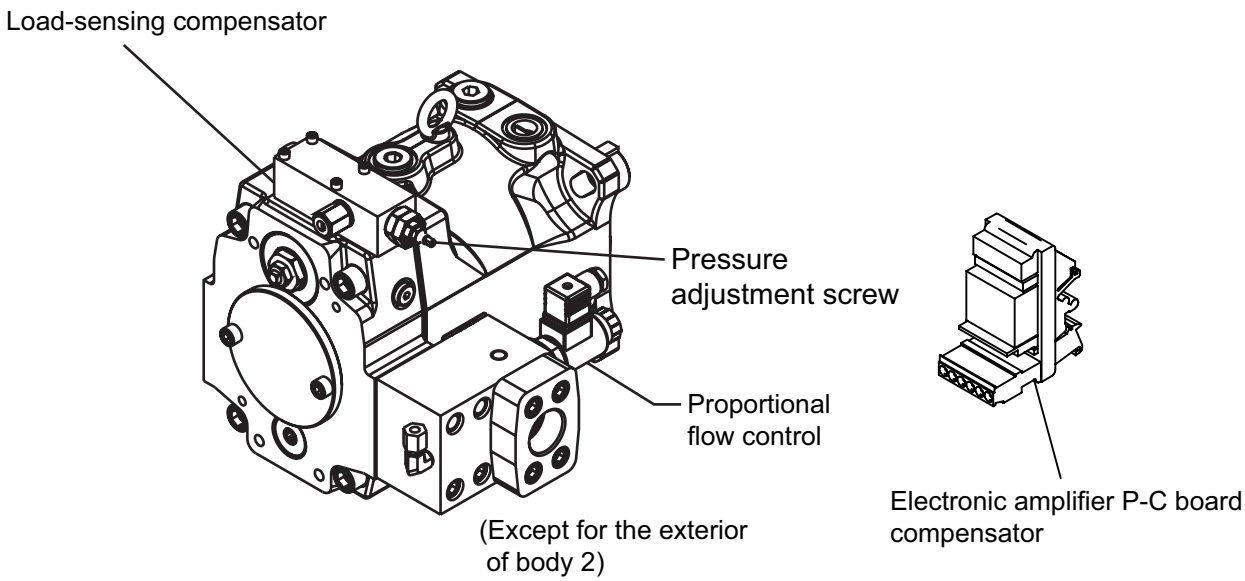

(Diagrammatic sketch)

HQ Load-sensing compensator + Proportional flow valve + Relief valve

The load-sensing compensator has an external pilot pressure supply.
Factory setting for the differential pressure is 10bar.
The input signal to the compensator is the differential pressure at the main stream resistor.
A load-sensing compensator represents mainly a flow control for the pump output flow, because the compensator keeps the pressure drop at the main stream resistor constant.
By adding YEOSHE proportional flow valve,
electrical proportional flow control is available.

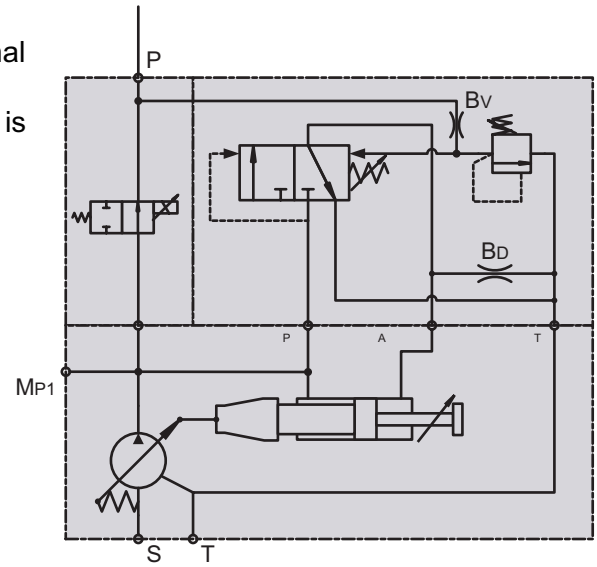

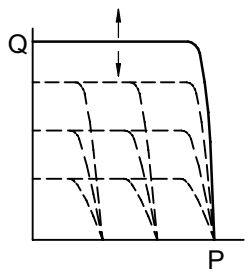

HK Load-sensing compensator + Proportional presure valve + Proportional flow valve

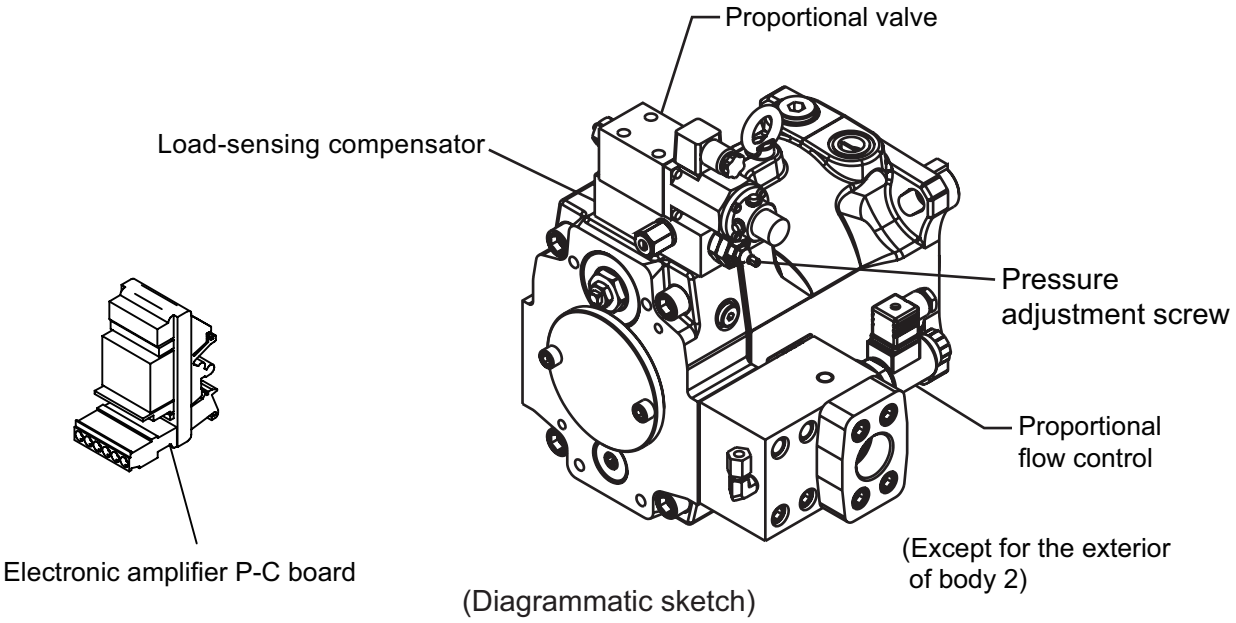

HK Load-sensing compensator + Proportional pressure valve
+ Proportional flow valve

HK is for saving energy.
It offers the smallest pressure and flow according to the different requirement.
The displacement is nearly zero when the system stands by, and the motor output is also nearly zero.
When the system reaches setting pressure, the pump displacement will reduce by itself.
It only needs to add the system required flow, and the pressure remains the same which control the oil temperature.
Compared with vane pump, gear pump + PQ valve can save 30%-50% energy.
The load-sensing compensator + proportional flow valve has all external pilot pressure supply.
Factory setting for the differential pressure is 10 bar.
The input signal to the compensator is the differential pressure at the main stream resistor.
A load-sensing compensator represents mainly a flow control for the pump output flow of the pump and the speed of the actuator.
Proportional pressure valve is for electrical proportional pressure control.

※Proportional pressure max.250 bar.
If needing any other pressure range, please contact YEOSHE.

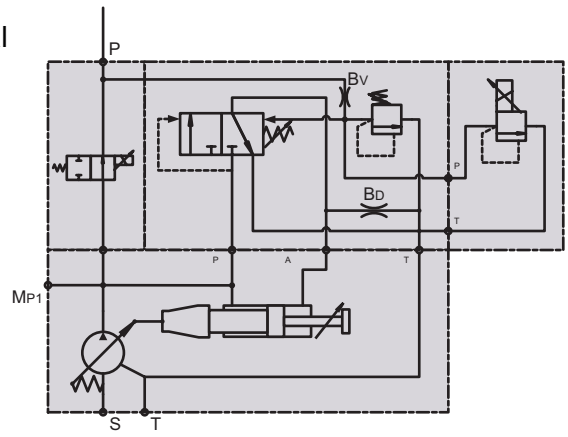

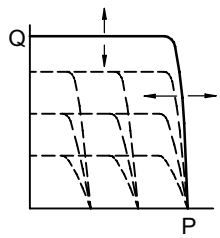

PM Horse power compensator with NG6 interface

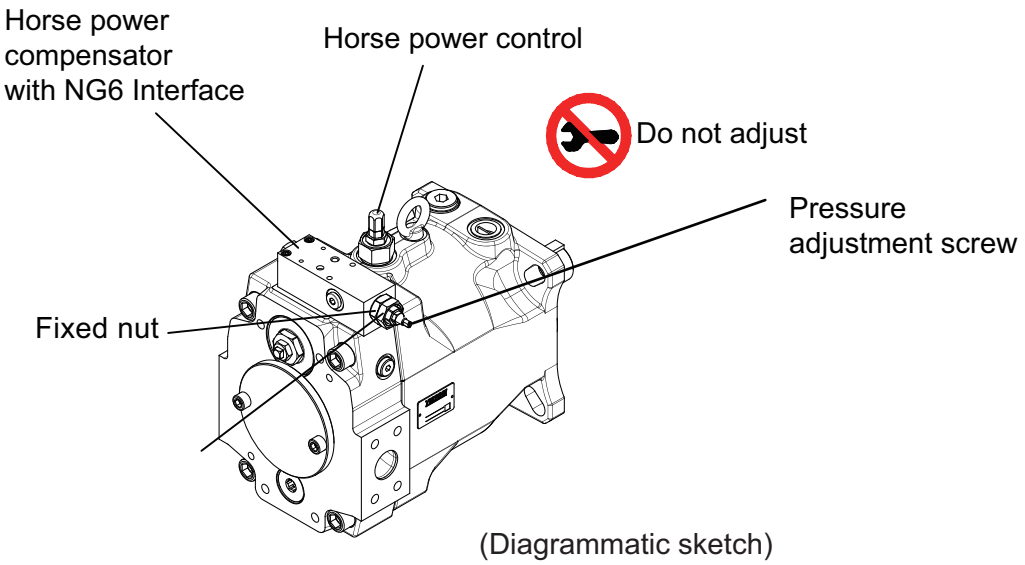

PM Horse power compensator with NG6 interface

The hydraulic-mechanical horse power compensator consists of a modified remote pressure compensator or of a modified load-sensing compensator and a pilot valve.
This pilot valve is integrated into the pump and is adjusted by a cam sleeve.
The cam sleeve has a contour that is designed and machined for the individual displacment and the nominal horse power setting.
At a large displacement the opening pressure (given by the cam sleeve diameter) is lower than at small displacements.
This makes the pump compensate along a constant horse power (torque) curve.
Horse power is optional when order.
Working pressure can be adjusted by adding YEOSHE pressure leading valve.
Adding the proportional pressure valve achieves the electrical proportional pressure control.

※Horse power setting,please following type code.

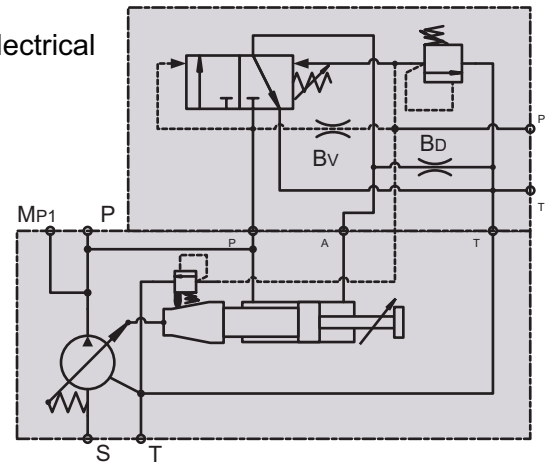

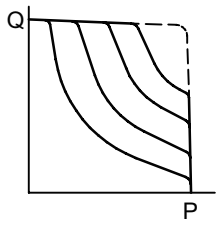

PA Horse power compensator + Relief valve

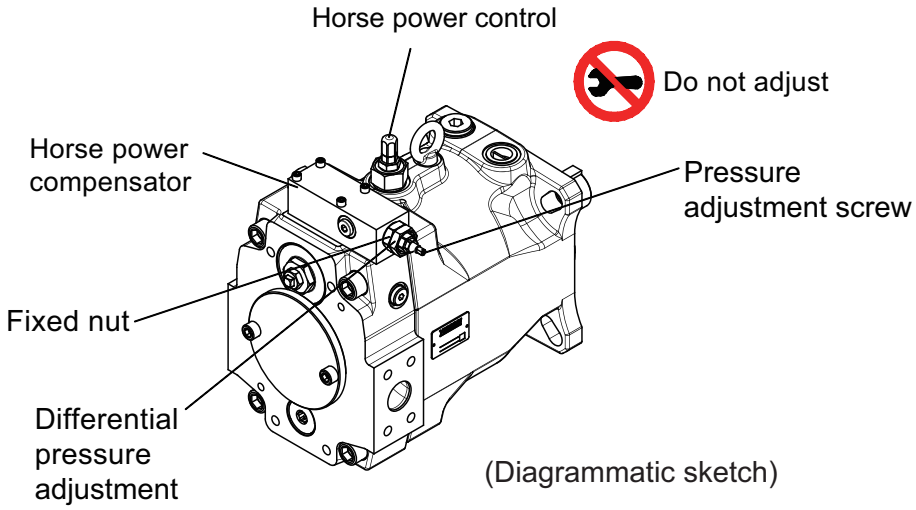

PA Horse power compensator + Relief valve

The hydraulic-mechanical horse power compensator consists of a modified remote pressure compensator or of a modified load-sensing compensator and a pilot valve.
This pilot valve is integrated into the pump and is adjusted by a cam sleeve.
The cam sleeve has a contour that is designed and machined for the individual displacement and the nominal horse power setting.
At a large displacement the opening pressure (given by the cam sleeve diameter) is lower than at small displacements.
This makes the pump compensate along a constant horse power (torque) curve.
Horse power is optional when order.
Working pressure can be adjusted by adding YEOSHE pressure leading valve.
Adding the proportional pressure valve achieves the electrical proportional pressure control.
The pilot valve can be installed remote from the pump in some distance.
That allows pressure setting e.g. from the control panel of the machine.
The pilot flow supply is internal through the valve spool and the pilot flow is 1-1.5 L/min.

※Horse power setting,please following type code.

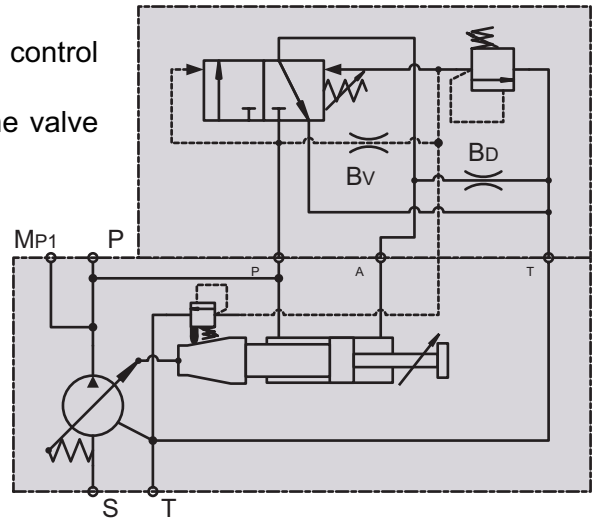

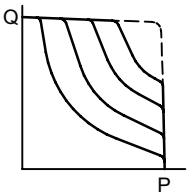

PJ Horse power compensator + Proportional pressure valve

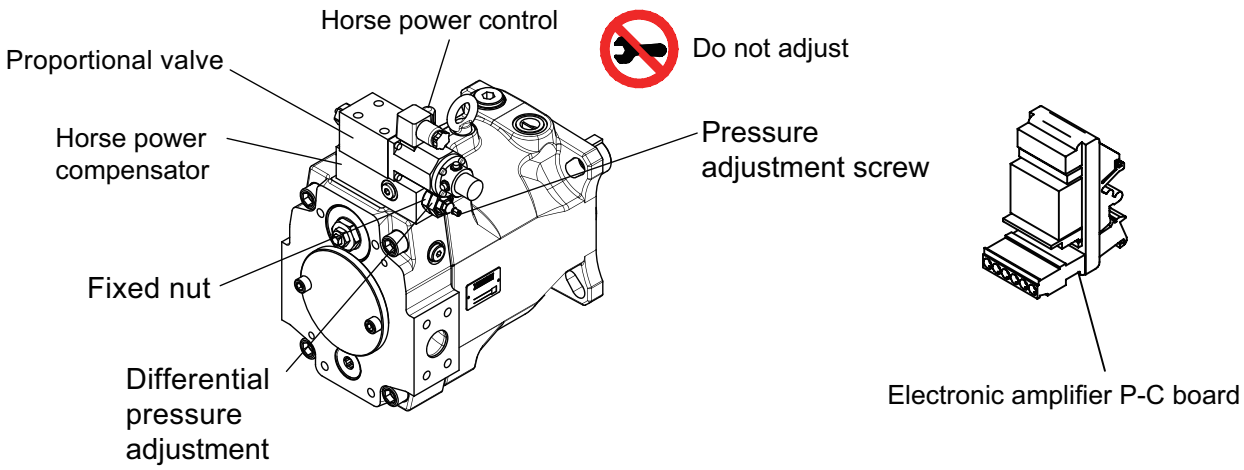

(Diagrammatic sketch)

PJ Horse power compensator + Proportional pressure valve

The hydraulic- mechanical horse power compensator consists of a modified remote pressure compensator or of a modified load-sensing compensator and a pilot valve.
This pilot valve is integrated into the pump and is adjusted by a cam sleeve.
The cam sleeve has a contour that is designed and machined for the individual displacement and the nominal horse power setting.
At a large displacement the opening pressure (given by the cam sleeve diameter) is lower than at small displacements.
This makes the pump compensate along a constant horse power (torque) curve.
Pressure-adjusted function is optional by adding a leading proportional pressure valve.

※Horse power setting,please following type code.

※Proportional pressure max.250 bar.
If needing any other pressure range,
please contact YEOSHE.

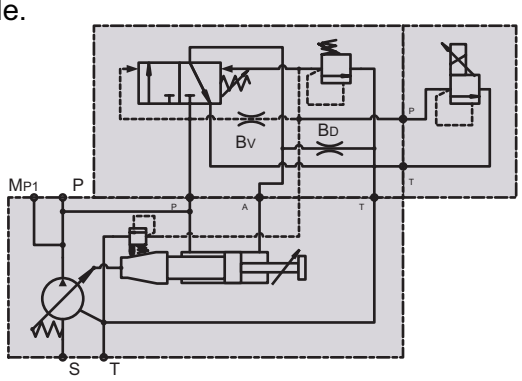

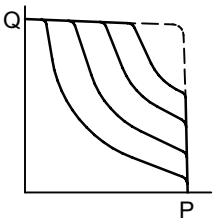

PR Horse power compensator + Electrical unloading

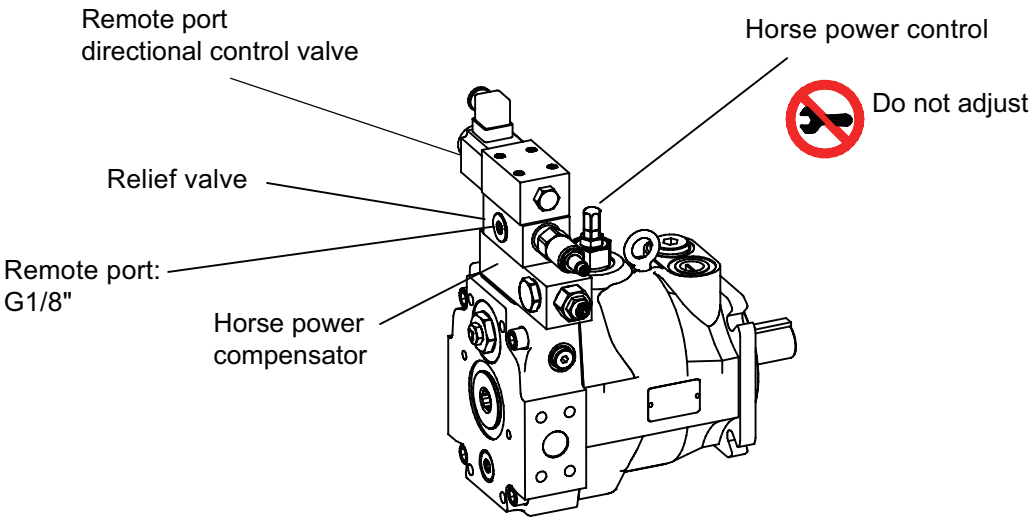

(Diagrammatic sketch)

PR Horse power compensator + Electrical unloading

The hydraulic-mechanical horse power compensator consists of a modified remote pressure compensator or of a modified load-sensing compensator and a pilot valve.
This pilot valve is integrated into the pump and is adjusted by a cam sleeve.
The cam sleeve has a contour that is designed and machined for the individual displacement and the nominal horse power setting.
At a large displacement the opening pressure (given by the cam sleeve diameter) is lower than at small displacements.
This makes the pump compensate along a constant horse power (torque) curve.
Electrical unloading function is optional by adding an electric directional control valve.
This control is suitable for long period of unloading.
Oil temperature and noise remain low level through out the electrical unloading function when the system stops working.

※Horse power setting,please following type code.

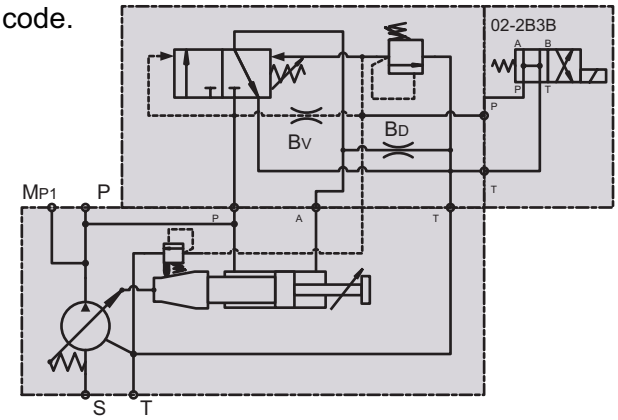

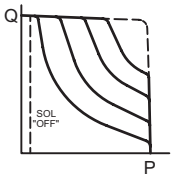

PC Horse power compensator + Electrical unloading +2-stage pressure control

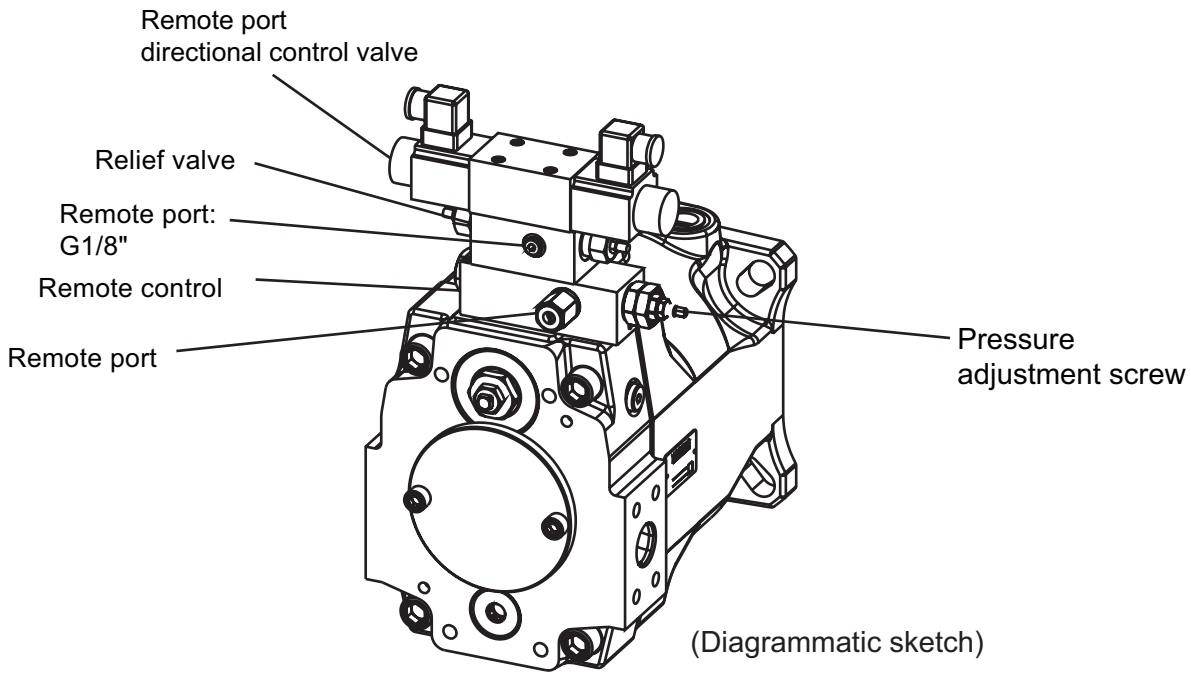

(Diagrammatic sketch)

PC Horse power compensator + Electrical unloading+2-stage pressure control

The hydraulic-mechanical horse power compensator consists of a modified remote pressure compensator or of a modified load-sensing compensator and a pilot valve.
This pilot valve is integrated into the pump and is adjusted by a cam sleeve.
The cam sleeve has a contour that is designed and machined for the individual displacement and the nominal horse power setting.
At a large displacement the opening pressure (given by the cam sleeve diameter) is lower than at small displacements.
Control two different-stage limited pressure by adding directional control valve, and unloading function.
When the system stops, oil temperature and noise maintain low level by unloading function.
Usable for stable cylinder speed, two-stage pressure, and long unloading situation.

※Horse power setting,please following type code.

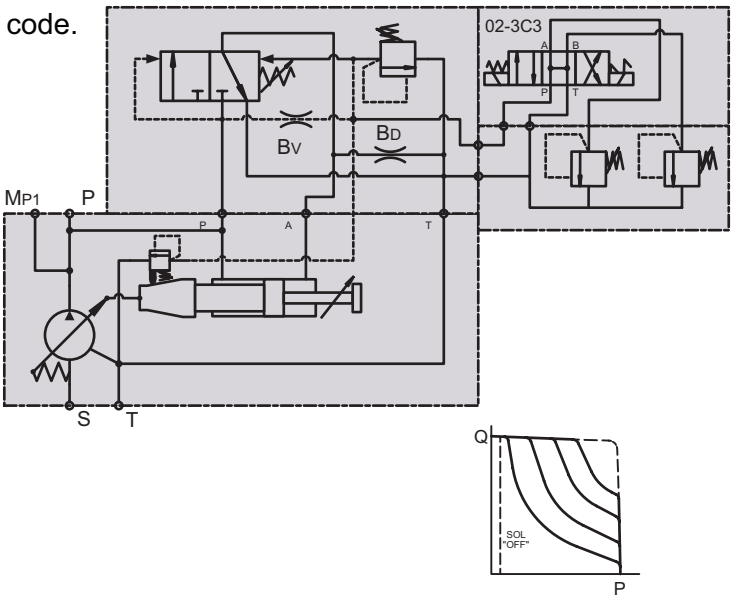

PH Horse power load-sensing compensator + Relief valve

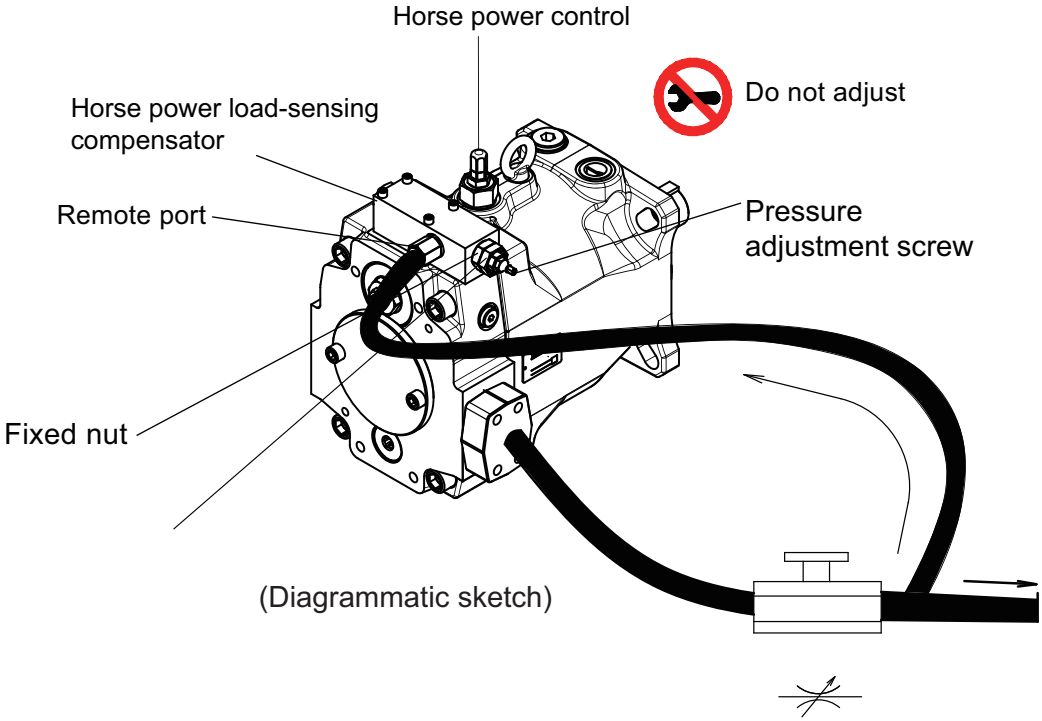

PH Horse power load-sensing compensator + Relief valve

The hydraulic-mechanical horse power compensator consists of a modified remote pressure compensator or of a modified load-sensing compensator and a pilot valve.
This pilot valve is integrated into the pump and is adjusted by a cam sleeve.
The cam sleeve has a contour that is designed and machined for the individual displacement and the nominal horse power setting.
At a large displacement the opening pressure (given by the cam sleeve diameter) is lower than at small displacements.
This makes the pump compensate along a constant horse power (torque) curve.
Horse power is optional when order.
Working pressure can be adjusted by adding a leading valve on the compensator, and pump flow can also be adjusted on the first pipe by adding an external feedback on the PF port as a control signal on the main stream.
The pilot valve can be installed remote from the pump in some distance.
That allows pressure setting, e.g. from the contral panel of the machine.
The pilot flow supply is internal through the valve spool,
and the pilot flow is 1~1.5 L/min.

※Horse power setting,please following type code.

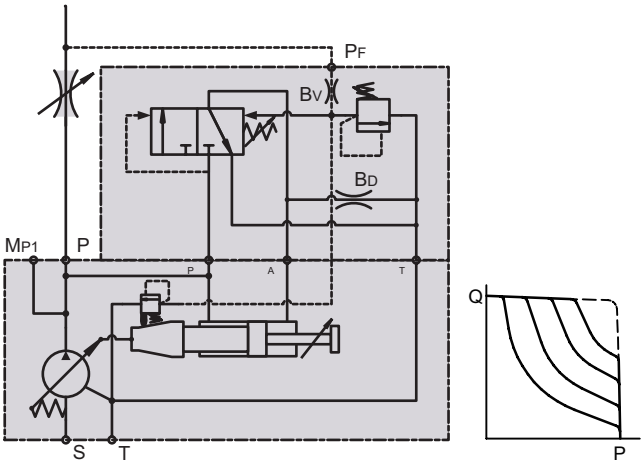

PQ Horse power load-sensing compensator + Proportional flow valve + Relief valve

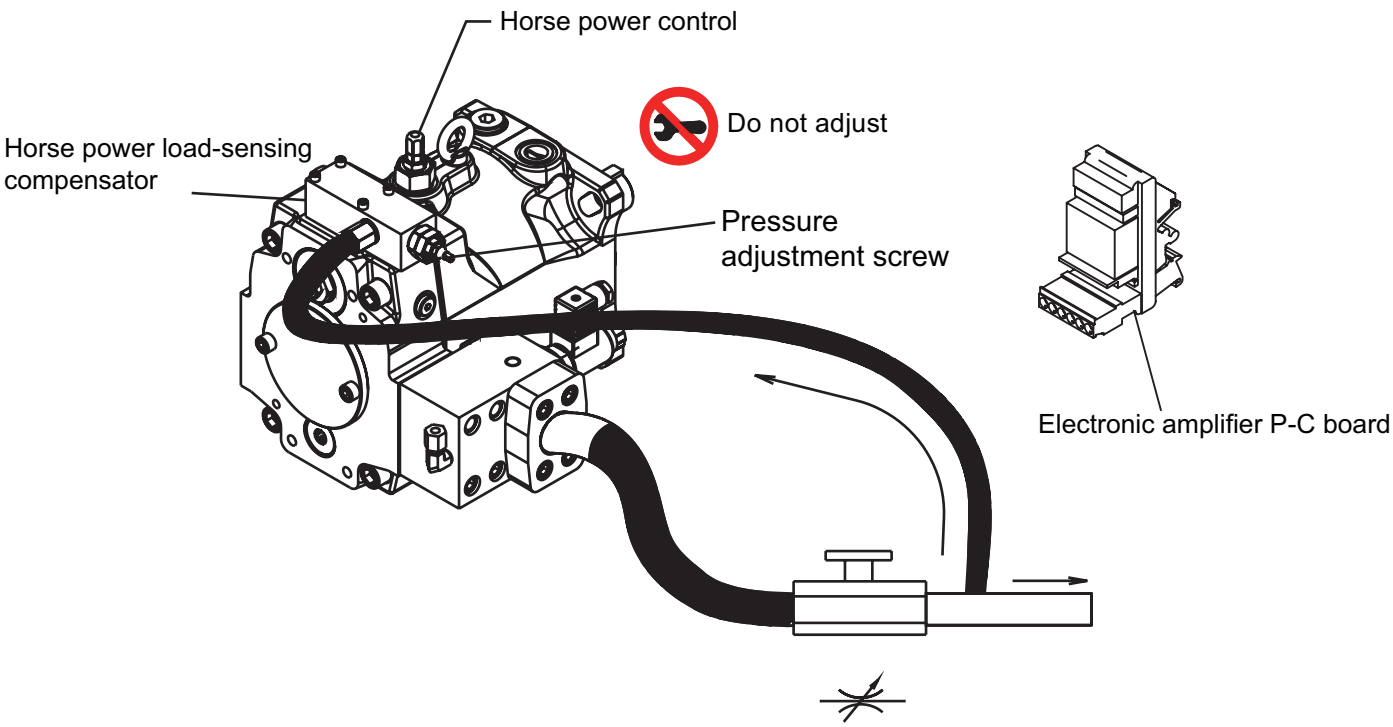

PQ Horse power load-sensing compensator + Proportional flow valve + Relief valve

The hydraulic-mechanical horse power compensator consists of a modified remote pressure compensator or of a modified load-sensing compensator and a pilot valve.
This pilot valve is integrated into the pump and is adjusted by a cam sleeve.
The cam sleeve has a contour that is designed and machined for the individual displacement and the nominal horse power setting.
At a large displacement the opening pressure (given by the cam sleeve diameter) is lower than at small displacements.
This makes the pump compensate along a constant horse power (torque) curve.
Pressure can be adjusted by adding a leading valve in the compensator, and pump flow can also be adjusted on the first pipe by adding an external feedback on the PF port as a control signal on the main stream.
Adding a proportional flow control valve on the P port achieves electrical proportional flow control.

※Horse power setting,please following type code.

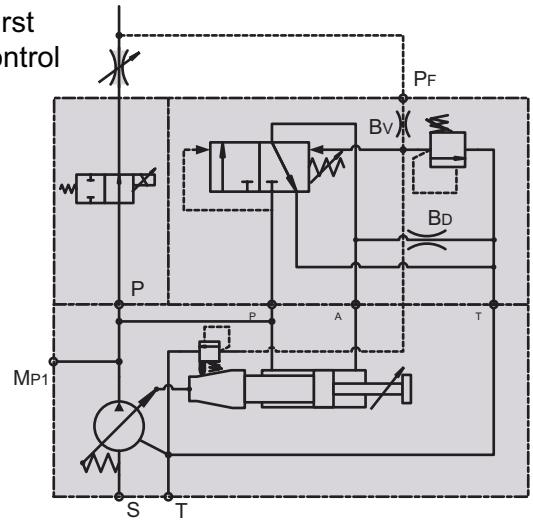

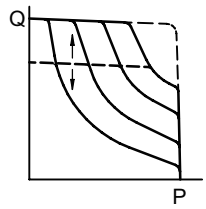

PS Horse power load-sensing compensator + Proportional pressure valve

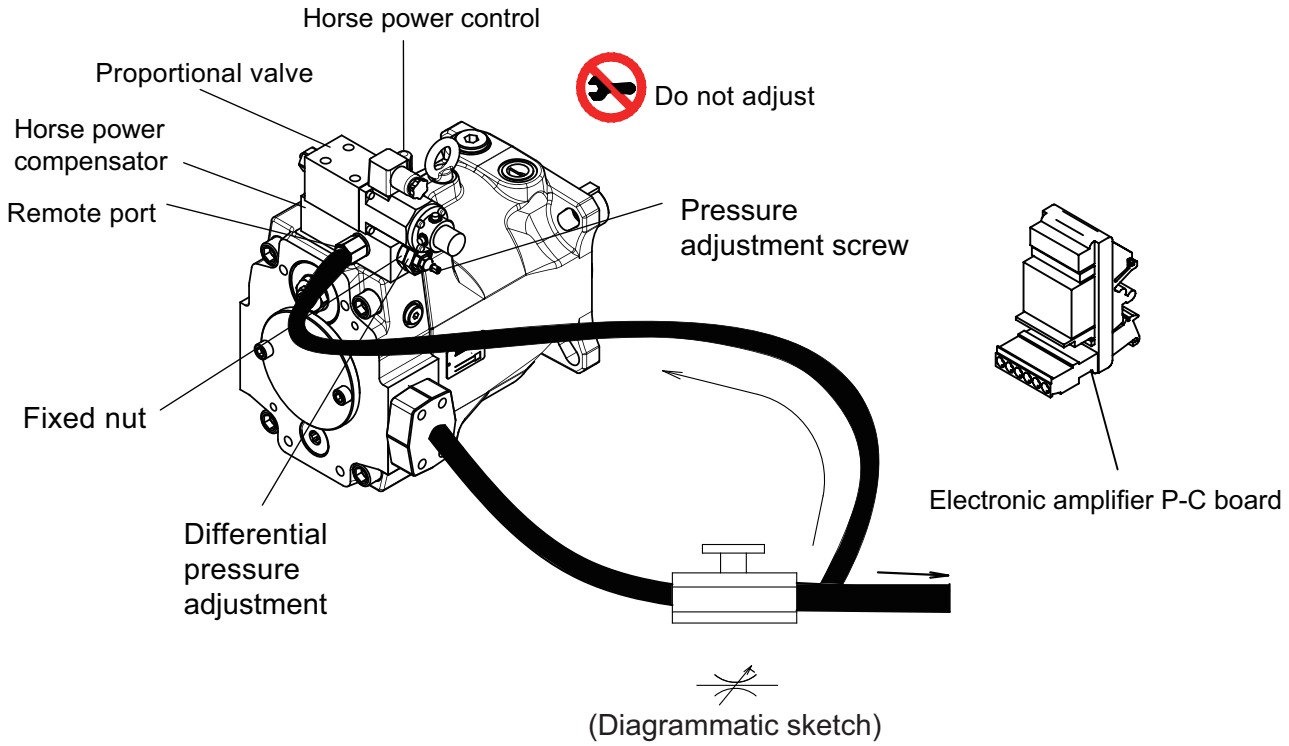

PS Horse power load-sensing compensator + Proportional pressure valve

The hydraulic-mechanical horse power compensator consists of a modified remote pressure compensator or of a modified load-sensing compensator and a pilot valve.
This pilot valve is integrated into the pump and is adjusted by a cam sleeve.
The cam sleeve has a contour that is designed and machined for the individual displacement and the nominal horse power setting.
At a large displacement the opening pressure (given by the cam sleeve diameter) is lower than at small displacements.
This makes the pump compensate along a constant horse power (torque) curve.
Electrical pressure-adjusted function is optional by adding a leading proportional pressure valve, and pump flow can also be adjusted on the first pipe by adding an external feedback on the PF port as a control signal on the main stream.

※Horse power setting,please following type code.

※Proportional pressure max.250 bar.
If needing any other pressure range, please contact YEOSHE.

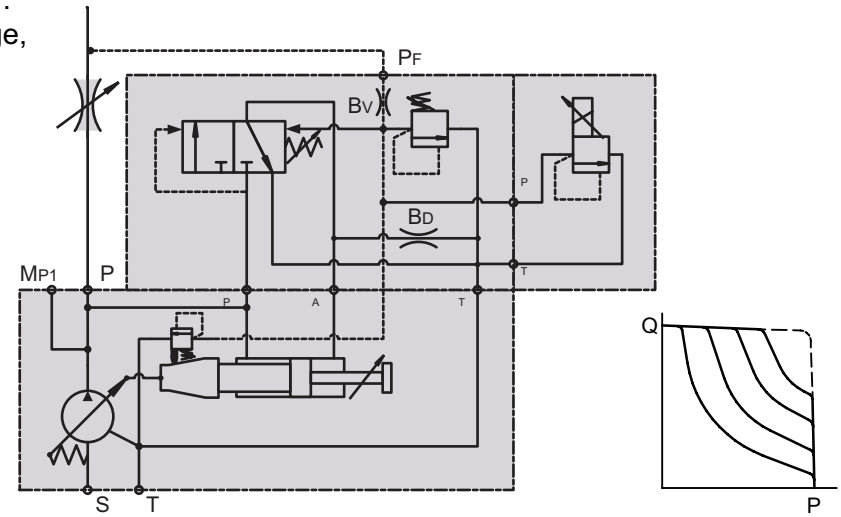

Horse power compensator, diagrams

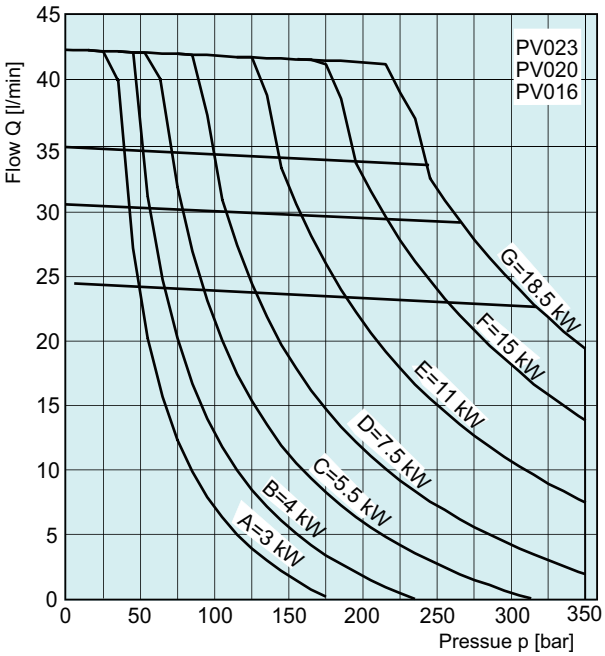

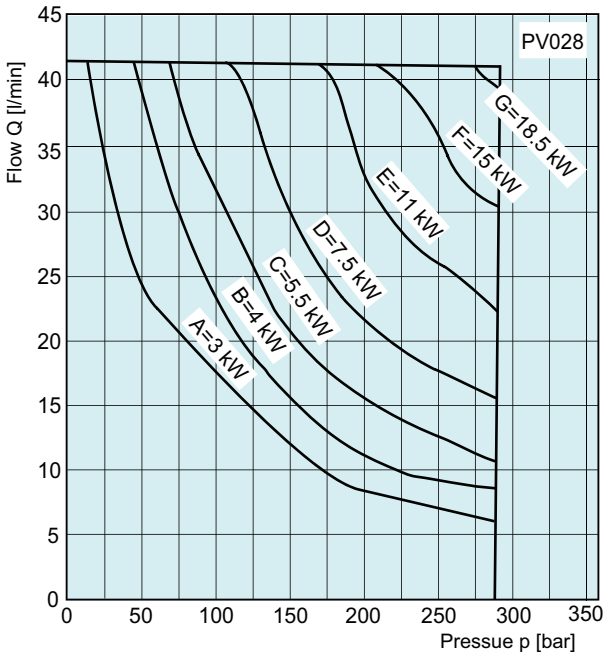

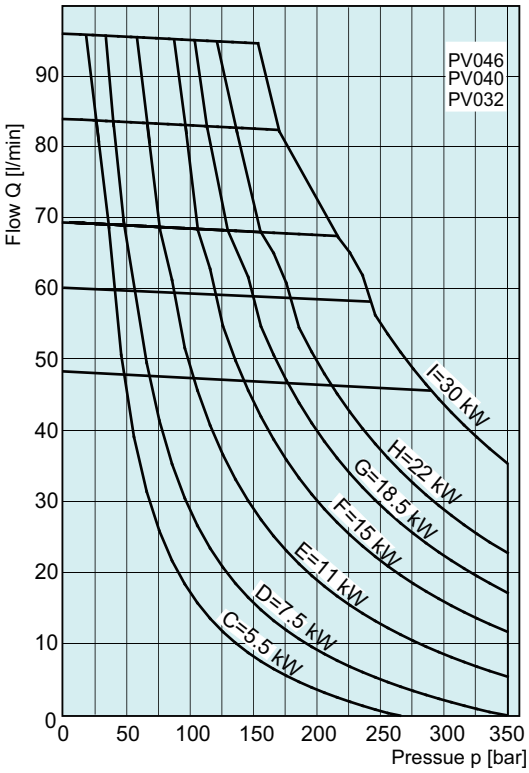

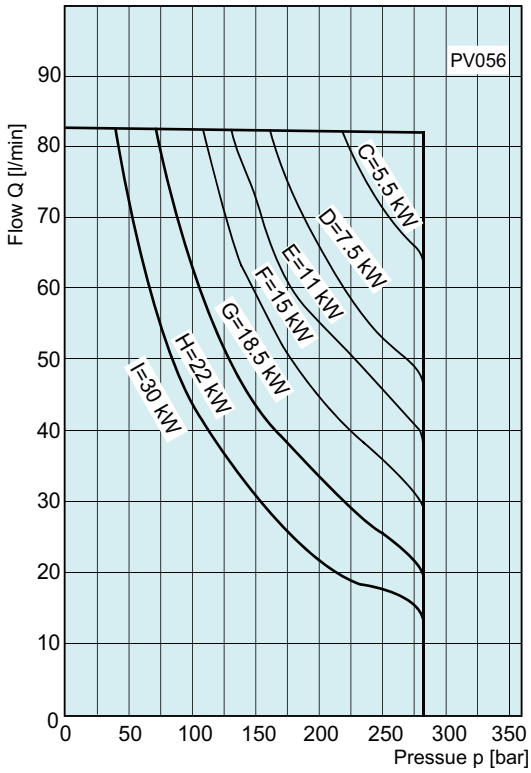

The diagrams are only valid for the following working conditions:
speed: n=1500 (- - -) and 1800 (- - -) rev/min
temperature: t=50°C
fluid: mineral oil HLP, ISO VG46
viscosity: v=46 mm2/s at 40°C

Horse power compensator, diagrams

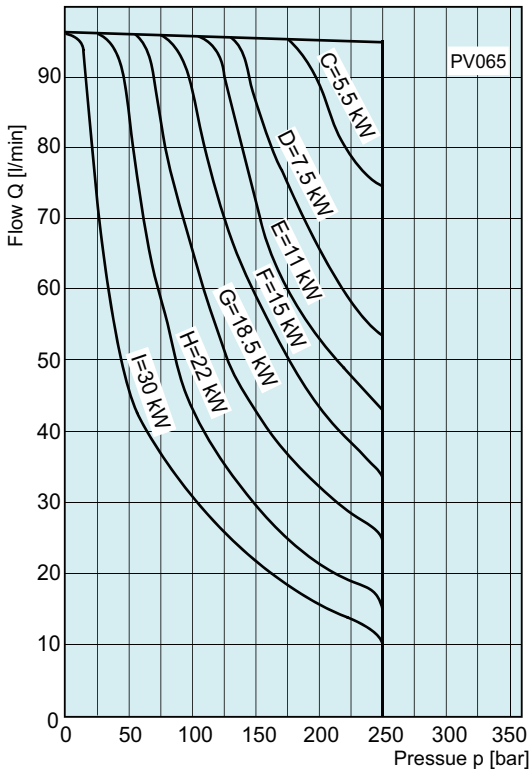

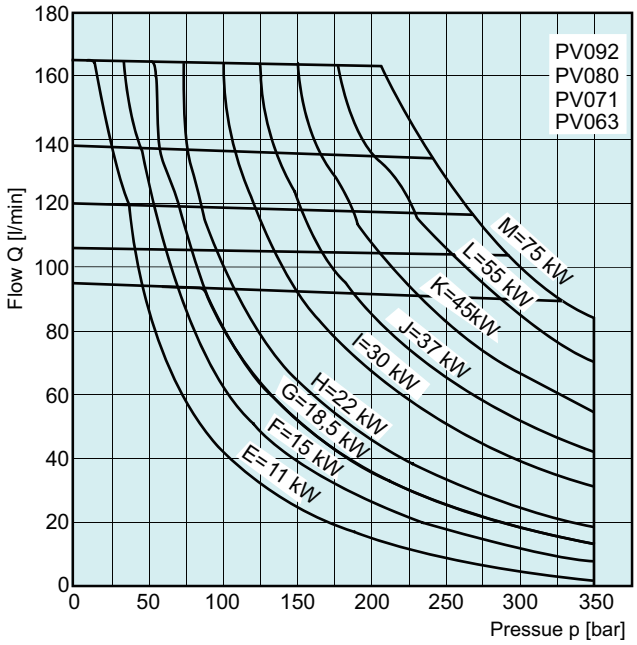

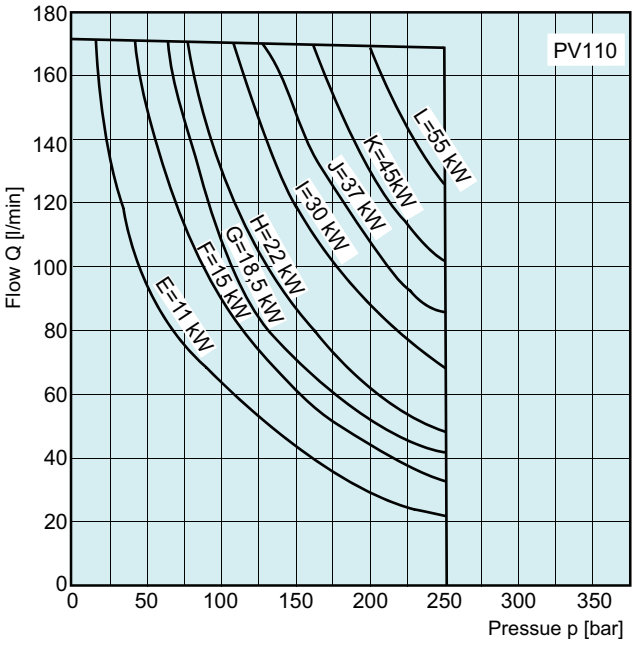

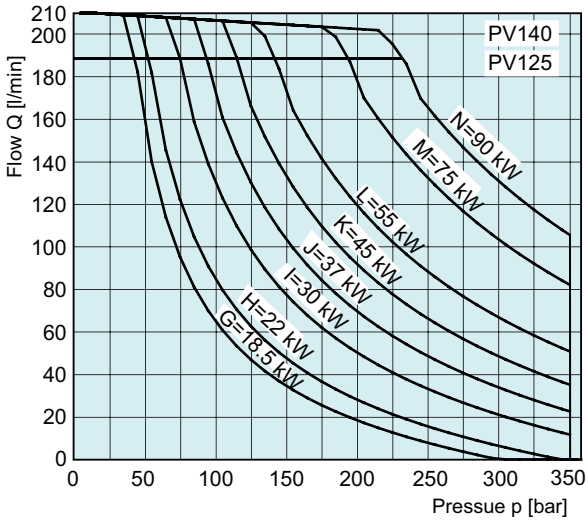

The diagrams are only valid for the following working conditions:
speed: n=1500 (- - -) and 1800 (- - -) rev/min
temperature: t=50°C
fluid: mineral oil HLP, ISO VG46
viscosity: v=46 mm2/s at 40°C

Horse power compensator, diagrams

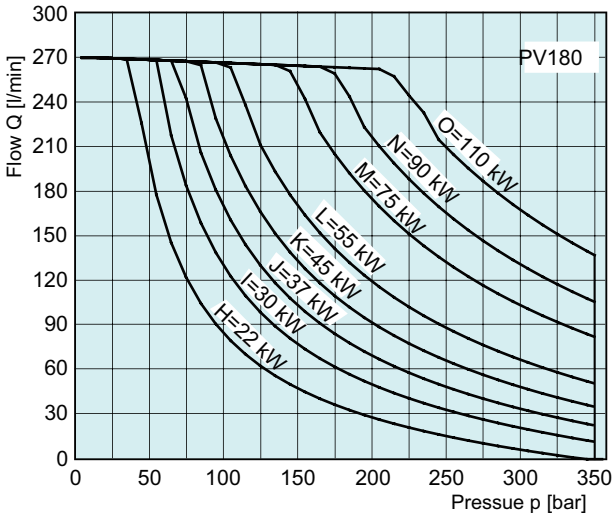

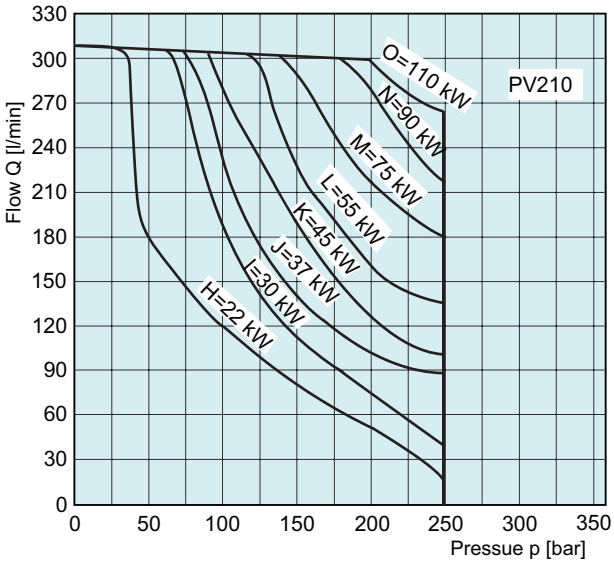

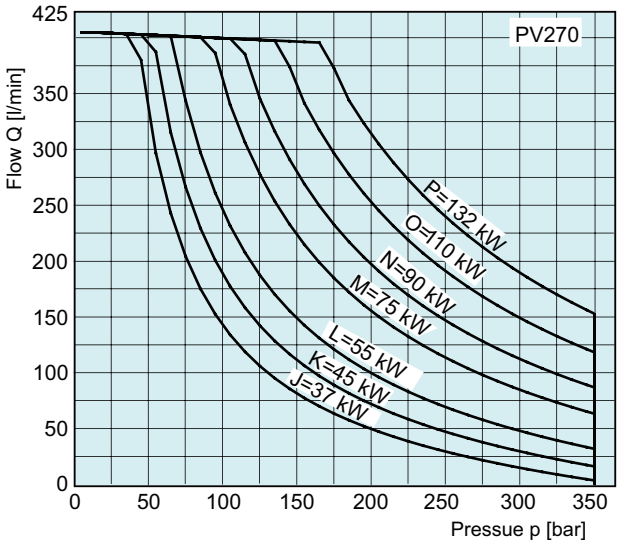

The diagrams are only valid for the following working conditions:
speed: n=1500 (- - -) and 1800 (- - -) rev/min
temperature: t=50°C
fluid: mineral oil HLP, ISO VG46
viscosity: v=46 mm2/s at 40°C

Noise diagrams

YEOSHE

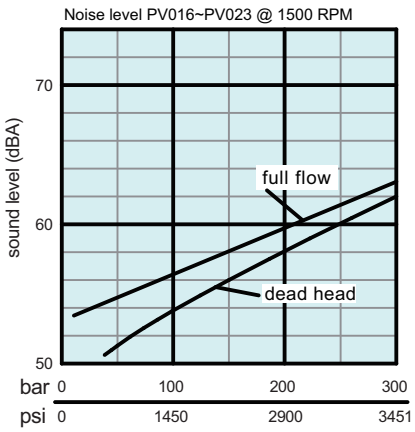

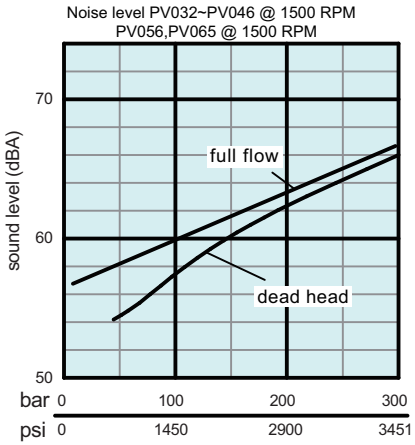

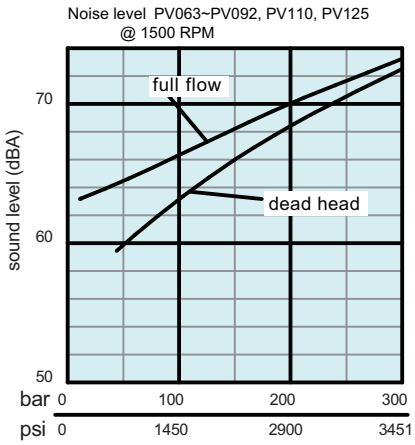

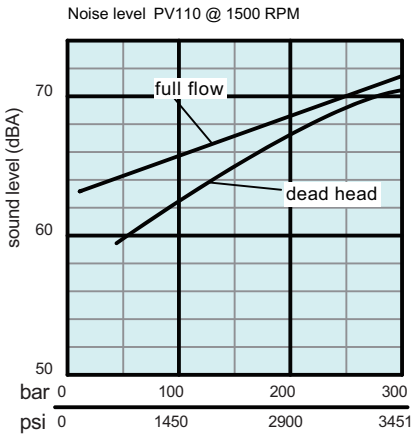

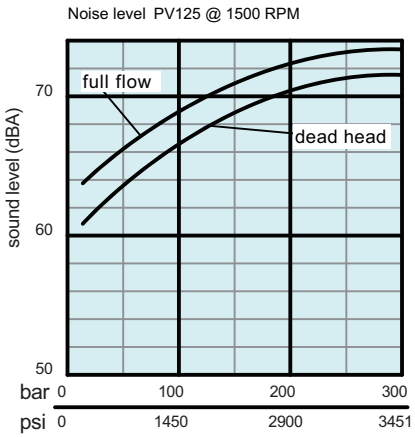

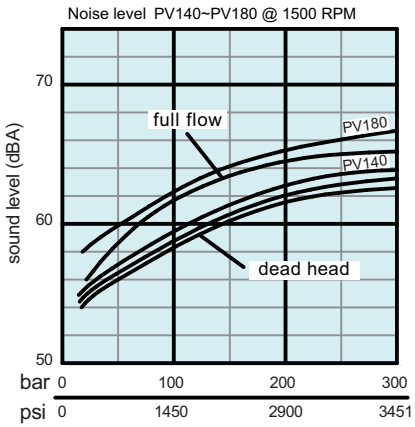

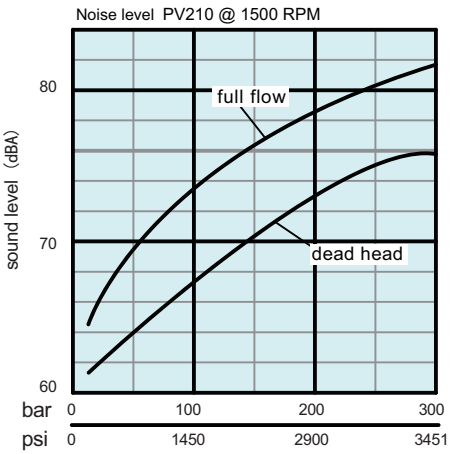

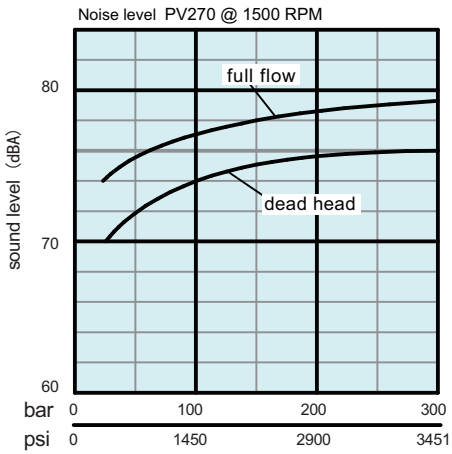

Test condition:
The noise of the single pump is according to the standard of DIN 45635, the rule of 1and26, at low echo measurement laboratory, measuring that the distance of microphone is 1m and 1500rpm.

Notice:
At the best time to install, the volume noise of hydraulic equipment is always 6 ~ 10 dBA higher than measuring at low echo measurement laboratory.

Proportional flow performance curves

PV16 + Proportional flow valve PFC-17E-2G-0350-N
+ Amplifier PC board PCB-2600

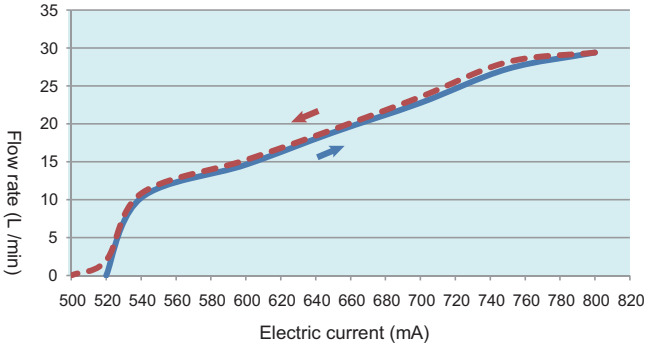

PV20+ Proportional flow valve PFC-17E-2G-0350-N
+ Amplifier PC board PCB-2600

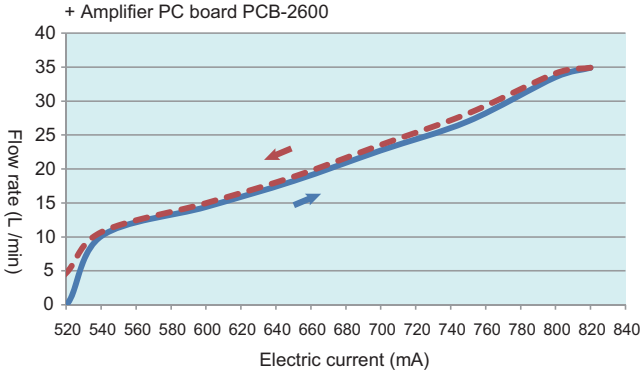

PV23+ Proportional flow valve PFC-17E-2G-0350-N
+ Amplifier PC board PCB-2600

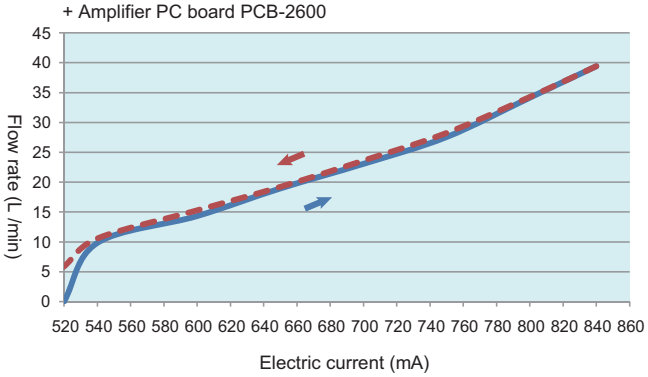

PV32+ Proportional flow valve PFC-17E-2G-0700-N
+ Amplifier PC board PCB-2600

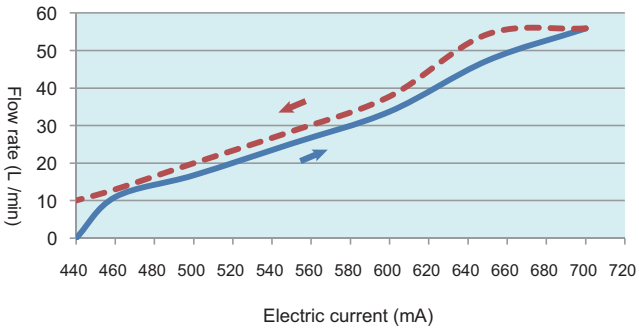

PV40 + Proportional flow valve PFC-17E-2G-0700-N
+ Amplifier PC board PCB-2600

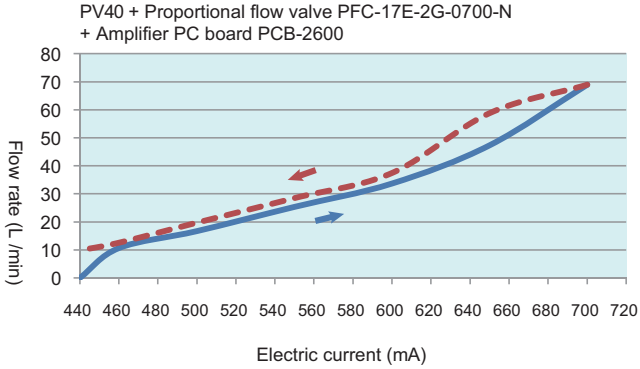

PV46 + Proportional flow valve PFC-17E-2G-0700-N
+ Amplifier PC board PCB-2600

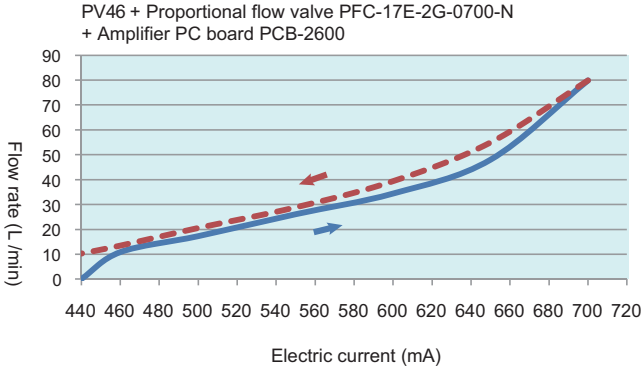

PV56+Proportional flow valve PFC-17E-2G-0700-N
+ Amplifier PC board PCB-2600

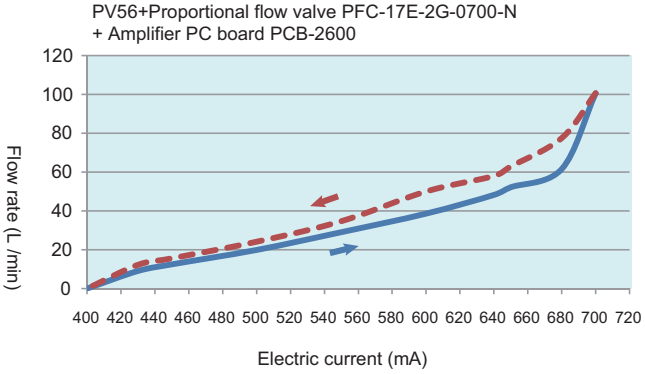

PV65 +Proportional flow valve PFC-17E-2G-0700-N
+ Amplifier PC board PCB-2600

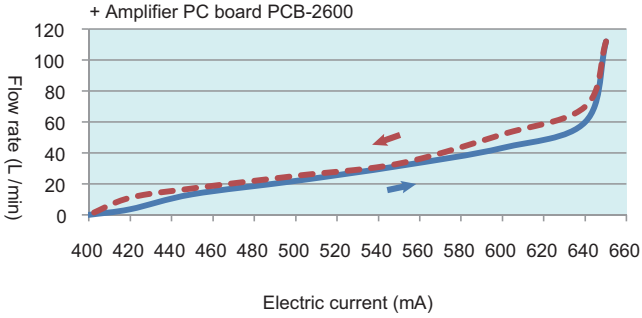

Proportional flow performance curves

YEOSHE

PV63 +Proportional flow valve PFC-17E-2G-0700-N
+ Amplifier PC board PCB-2600

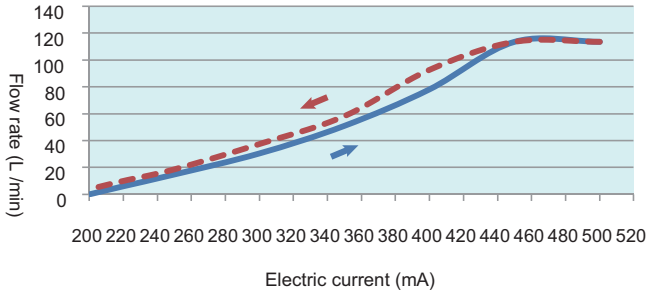

PV71 +Proportional flow valve PFC-17E-2G-0700-N
+ Amplifier PC board PCB-2600

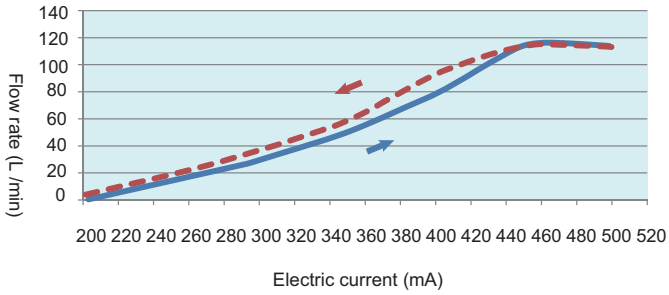

PV80 + Proportional flow valve PEV-16A-2D-09-N-1600
+ Amplifier PC board PCB-2600

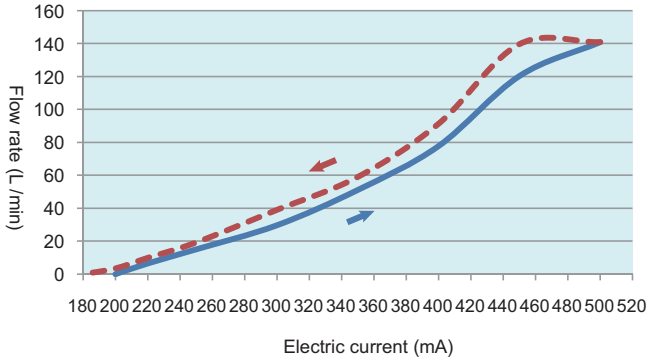

PV92 + Proportional flow valve PEV - 16A-2D-09-N-1600
+ Amplifier PC board PCB-2600

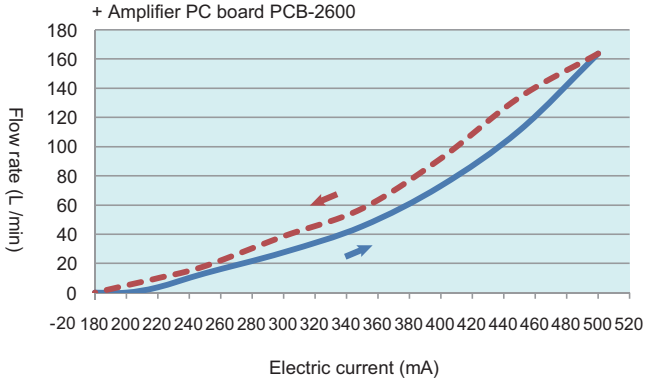

PV110 + Proportional flow valve PEV-16A-2D-09-N-1600
+ Amplifier PC board PCB-2600

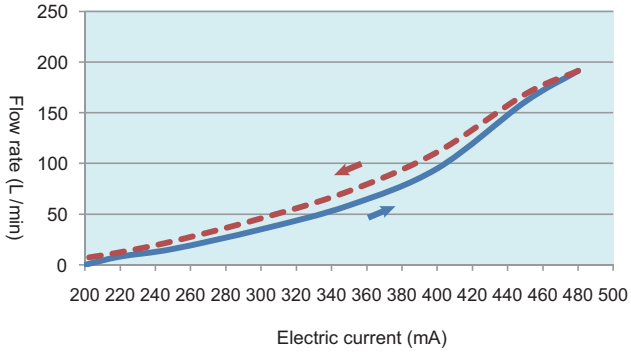

PV125 + Proportional flow valve PEV-16A-2D-09-N-1600
+ Amplifier PC board PCB-2600

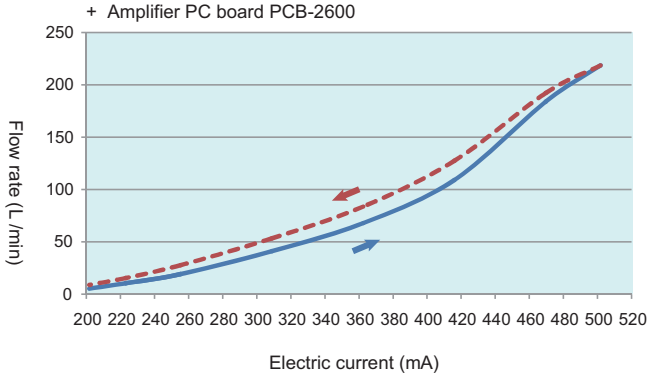

PV140 + Proportional flow valve PEV-18A-2D-09-N-3200
+ Amplifier PC board PCB-2600

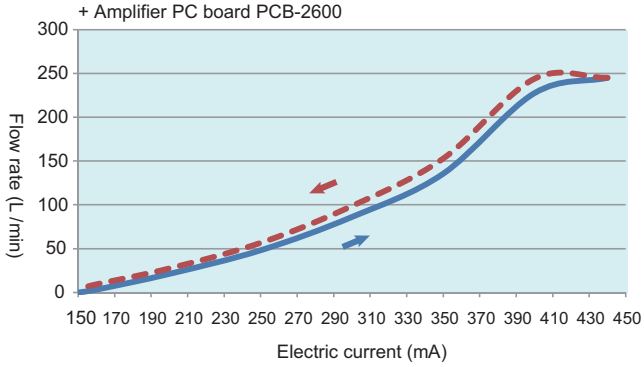

PV180 + Proportional flow valve PEV-18A-2D-09-N-3200
+ Amplifier PC board PCB-2600

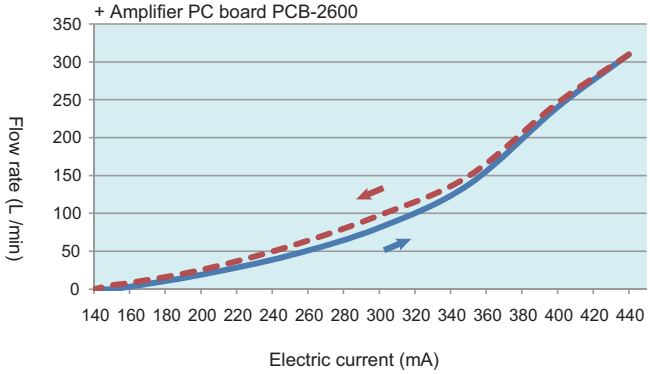

Proportional pressure performance curves

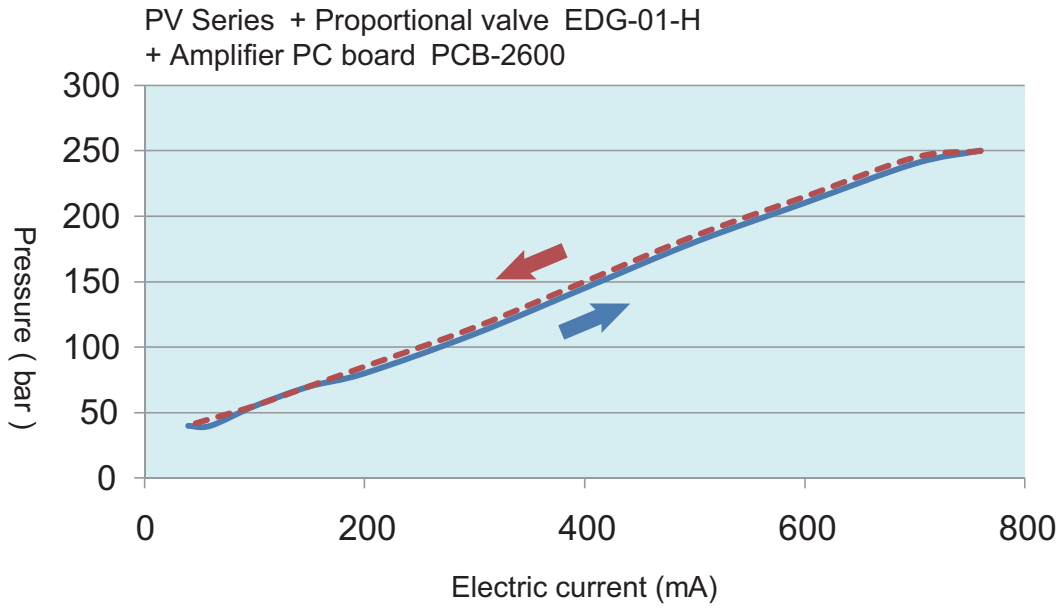

Proportional amplifier

YEOSHE

PCB-2600

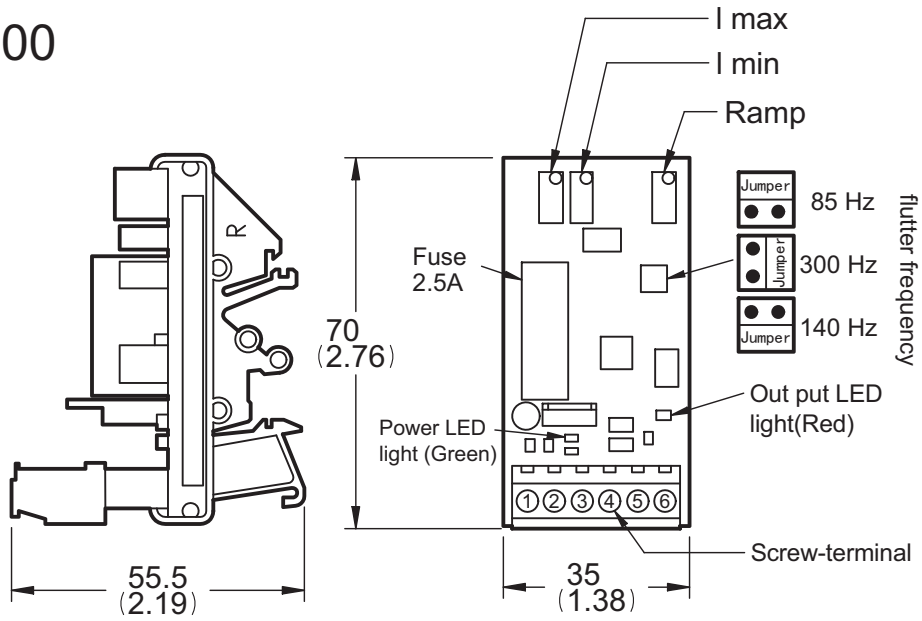

UNIT：mm
(inch)

Instructions for setting

Supply：green LED

RAMP：ramping up/down time adjustment.
For long ramping times, turn potentiometers clockwise, for short ramping times, turn potentiometers counter-clockwise.

MAX/MIN:

I max / I min
There are multi-course potentiometers for adjustment of min-max and also ramp time.

Frequency ADJ.:

The dither frequency can be set with a jumper to 85, 140, or 300 Hz.

Techincal data

Supply voltage：10-35 VDC

Max. current：0-2600 mA adjustable for 12 and 24 VDC
(Output is a PWM-DC)

Min. current：0-600 mA adjustable

Ramp adjustment：0~5 Sec.

Dither frequency：85, 140, 300 Hz to be set by jumper(Standard 140 Hz)

Ambient operating temperature：-15~140℉
-10~60℃

Weight：0.05kg

NOTICE

Do not remove the amplifier from the coil while the power is on.
This will cause a failure in the internal circuits of the amplifier, resulting in loss of output to the coil.

Proportional amplifier

External voltage control

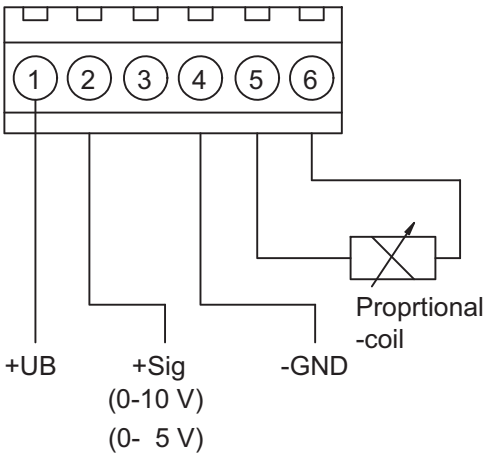

Potentiometer control

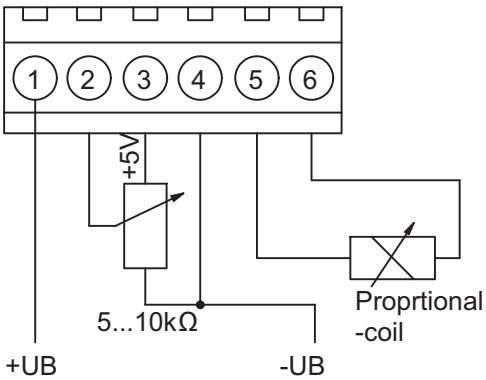

External current control

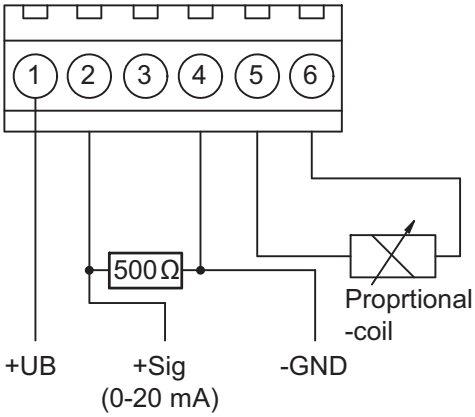

Two point control

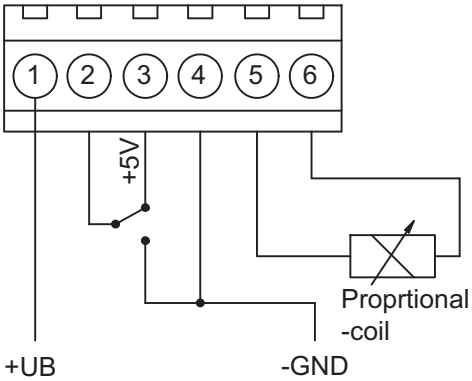

. Clamp connections plug in connector
Pin 1 =+ UB; supply voltage (10-35 VDC)
Pin 2 = Control voltage (+ Sig)
Pin 3 = Auxiliary voltage (+ 5 VDC)
Pin 4 = Ground (GND)
Pin 5 = Solenoid (-)
Pin 6 = Solenoid (+)

. Potentiometer
Turn clockwise means increasing current or Extension of ramp time
App. 10 turns for complete range

.Fuse
Standard 20 mm Glass fuse 2.5 A T

.LED's
LED +VS (green) = lights, when voltage supply and fuse are in order
LED1 (red) = lights, if there is an output to the solenoid

Efficiency and case drain flows

YEOSHE

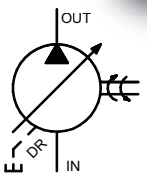

PV016 ~ PV023
PV028 (Body1)

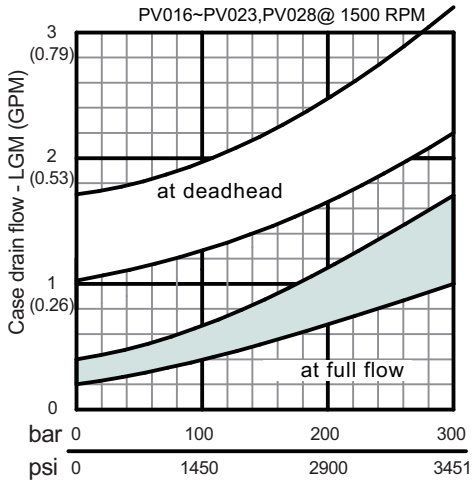

The efficiency and power graphs are measured at an input speed of n = 1500 RPM, a temperature of 40°C and a fluid viscosity of 46 mm2/s.
Case drain flow and compensator control flow leave via the drain port of the pump.
To the values shown are to be added 1 to 1.2 l/min , if at pilot operated compensators (codes G*, H*, P*, horse power compensator and p/Q-control) the control flow of the pressure pilot valve also goes through the pump.

Please note: The values shown below are only valid for static operation.
Under dynamic conditions and at rapid compensation of the pump the volume displaced by the servo piston also leaves the case drain port.
This dynamic control flow can reach up to 40 l/min! Therefore the case drain line is to lead to the reservoir at full size and without restrictions as short and direct as possible.

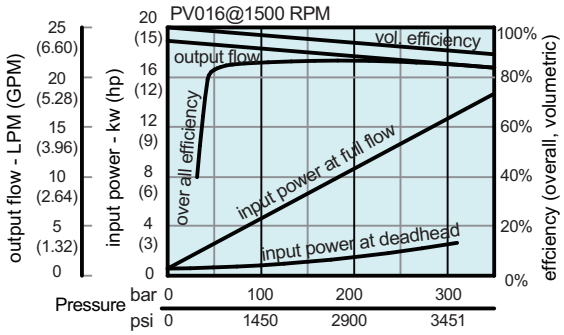

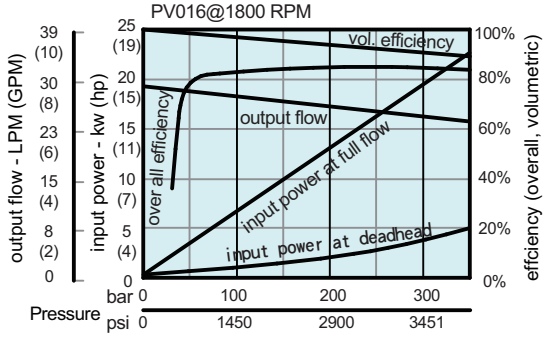

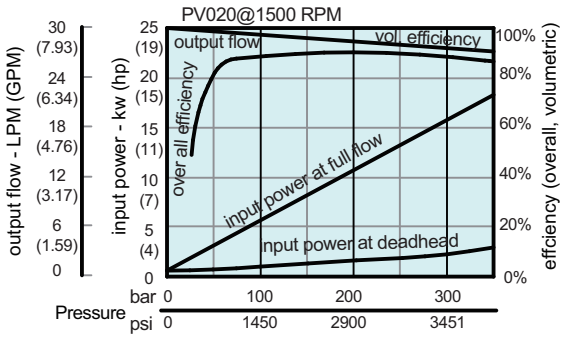

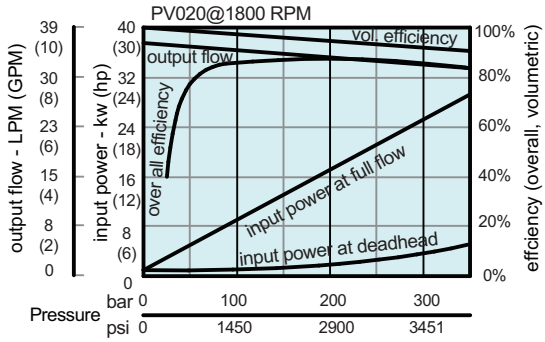

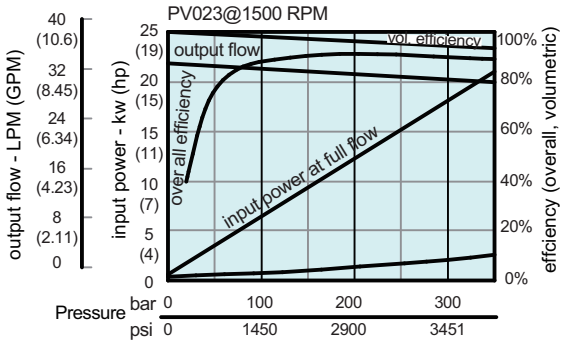

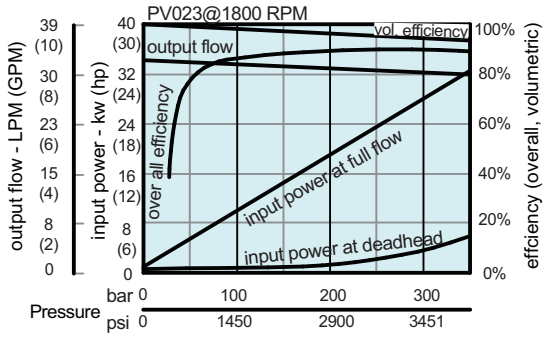

Dimensions

PV016 ~ PV023,PV028(Body 1)

Metric version (Motor Mounting Ø100)

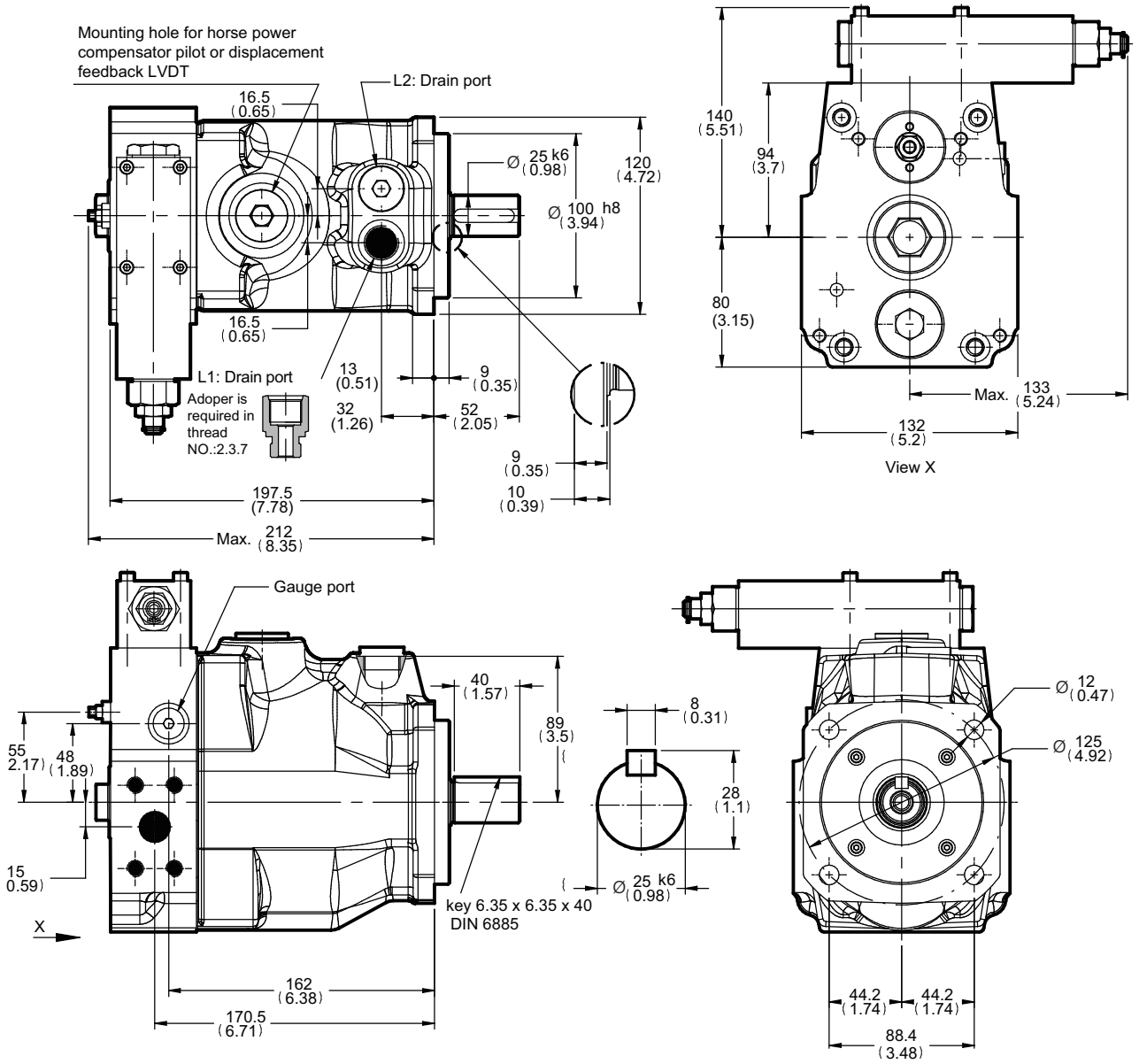

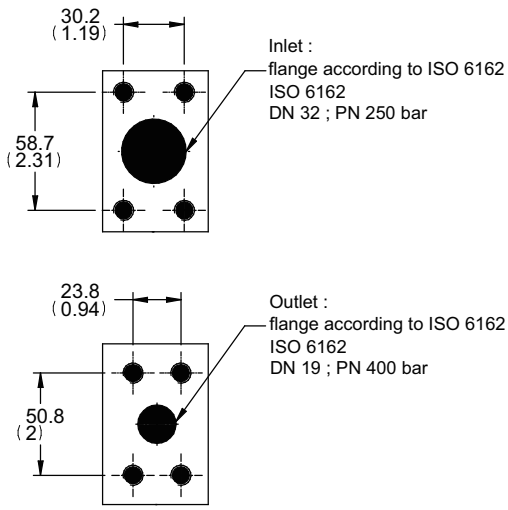

Ports

Thread	1 BSPP(G)	2 PT(RC)	3 UNF(SAE)	7 ISO 6149(M)
Inlet	Ø32 M10*P1.5 18 deep	Ø32 M10*P1.5 18 deep	Ø32 7/16"-14 UNC 18 deep	Ø32 M10*P1.5 18 deep
Outlet	Ø19 M10*P1.5 18 deep	Ø19 M10*P1.5 18 deep	Ø19 7/16"-14 UNC 18 deep	Ø19 M10*P1.5 18 deep
Drain port (L1/ L2)	G 1/2"-14	PT 1/2"-14	7/8"-14 UNF	M22*P1.5
Gauge port	G 1/4"-19	PT 1/4"-19	7/16"-20 UNF	M12*P1.5

Threads code: 3 & 7 are not standard, not it stock, specially fabricate.
Adoper is required in thread NO.:2.3.7 (Drain port)

Dimensions

YEOSHE

PV016 ~ PV023,PV028(Body 1)

Metric version (Motor Mounting Ø100)

Shaft type

Mounting code: M

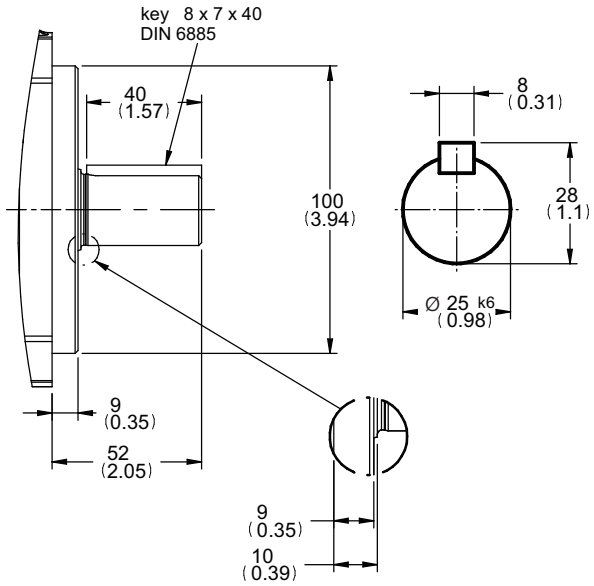

Mounting code: R

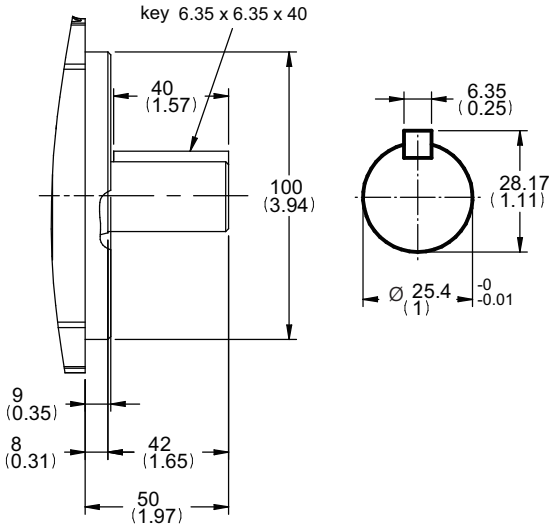

Mounting code: K

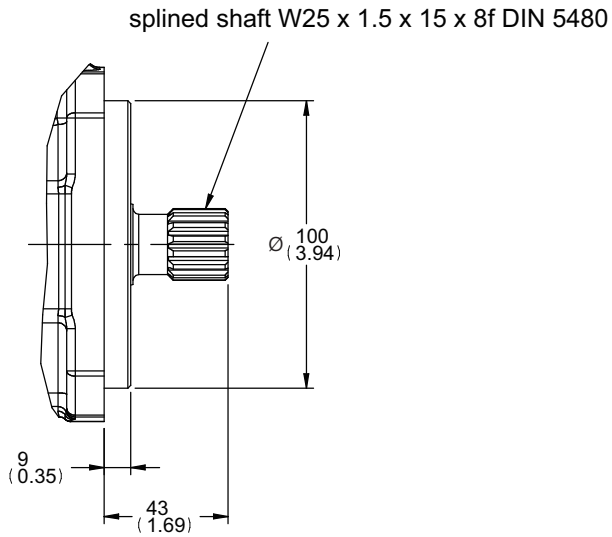

Mounting code: S

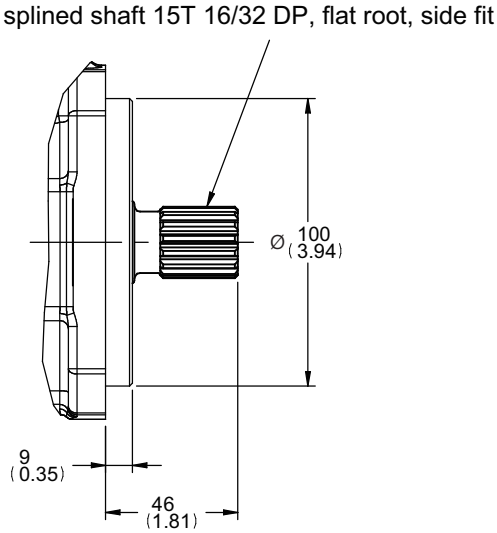

Dimensions

PV016 ~ PV023,PV028(Body 1)

SAE version(motor mounting Ø101.6)

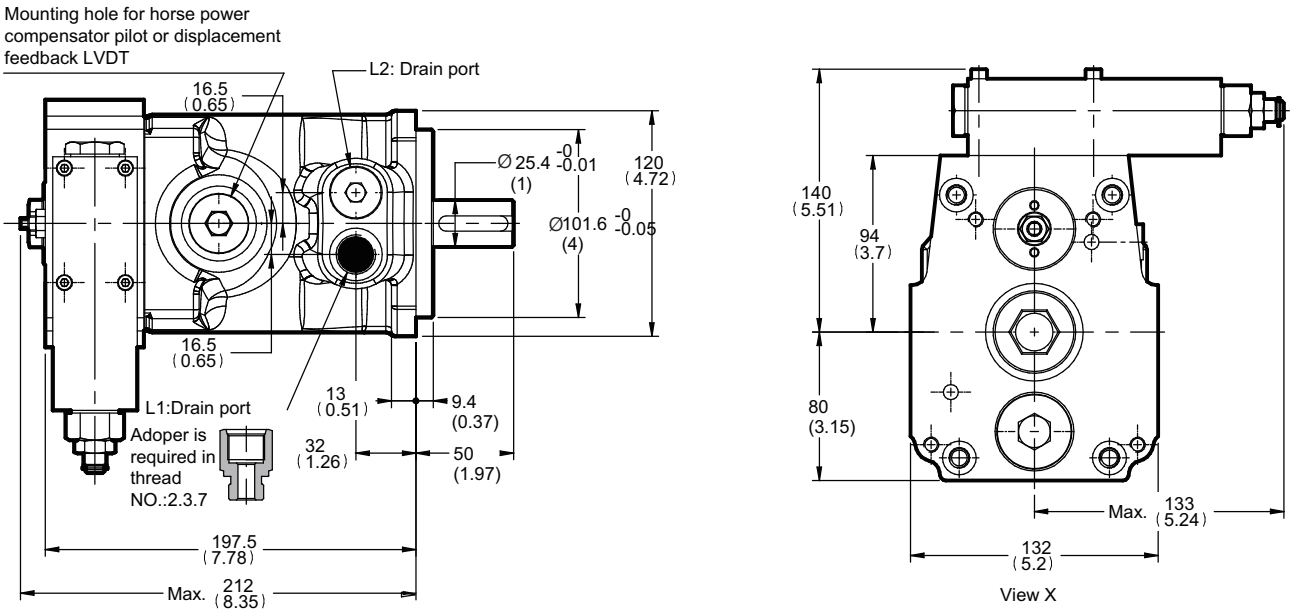

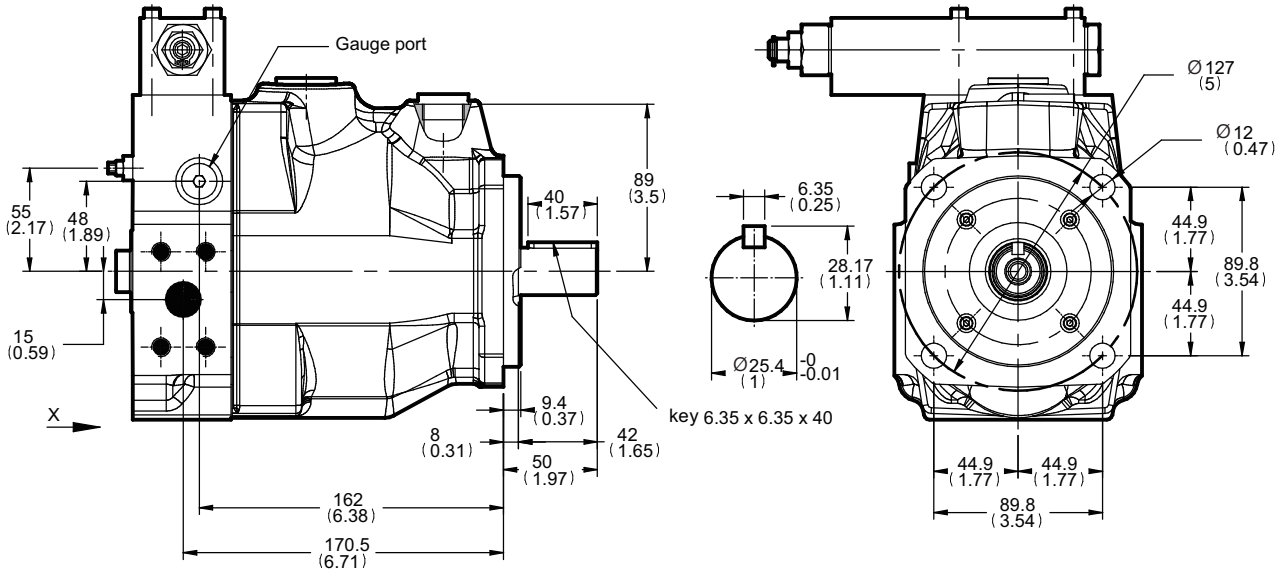

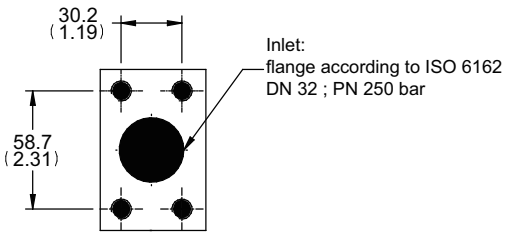

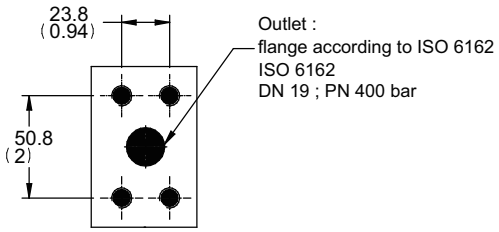

Ports

Thread	3 UNF(SAE)	1 BSPP(G)	2 PT(RC)	7 ISO 6149(M)
Inlet	Ø32 7/16”-14 UNC	Ø32 M10*P1.5 18 deep	Ø32 M10*P1.5 18 deep	Ø32 M10*P1.5 18 deep
Outlet	Ø19 7/16”-14 UNC	Ø19 M10*P1.5 18 deep	Ø19 M10*P1.5 18 deep	Ø19 M10*P1.5 18 deep
Drain port (L1/L2)	7/8”-14 UNF	G 1/2”-14	PT 1/2”-14	M22*P1.5
Gauge port	7/16”-20 UNF	G 1/4”-19	PT 1/4”-19	M12*P1.5

Threads code: 3 & 7 are not standard, not it stock, specially fabricate.
Adoper is required in thread NO.:2.3.7 (Drain port)

Dimensions

YEOSHE

PV016 ~ PV023,PV028(Body 1)

SAE version (motor mounting Ø101.6)

Shaft type

Mounting code: N

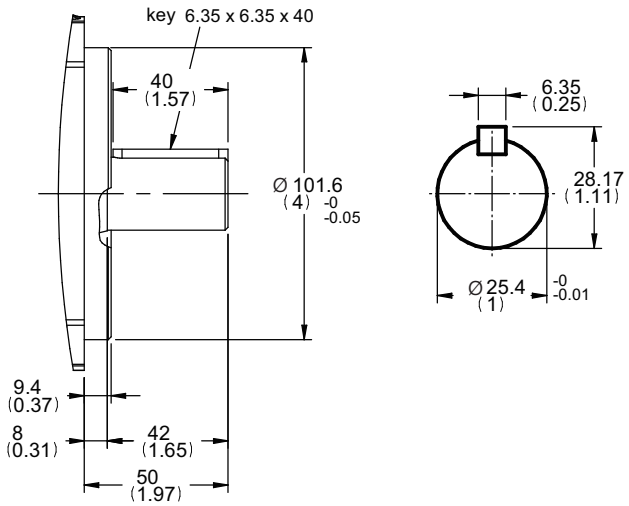

Mounting code: J

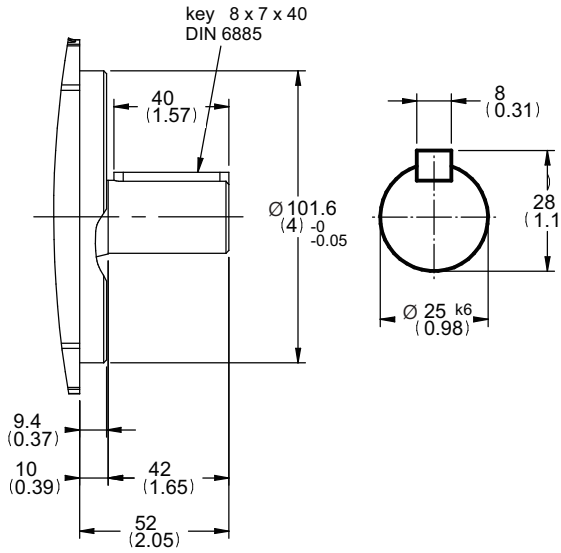

Mounting code: D

splined shaft 15T 16/32 DP, flat root, side fit
ANSI B92.1

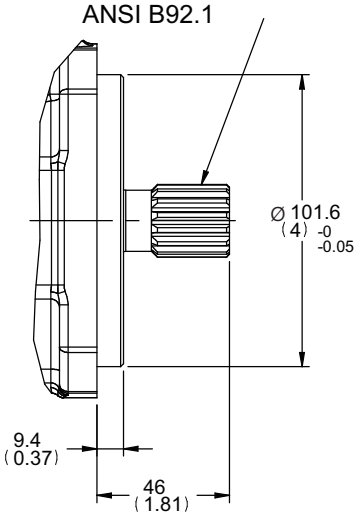

Mounting code: U

splined shaft W25 x 1.5 x 15 x 8f DIN 5480

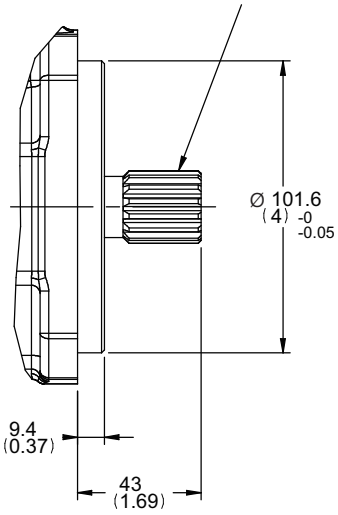

Dimensions

PV016 ~ PV023,PV028(Body 1)

Thru drive

Thru drive:

C, D, E, I, J, K

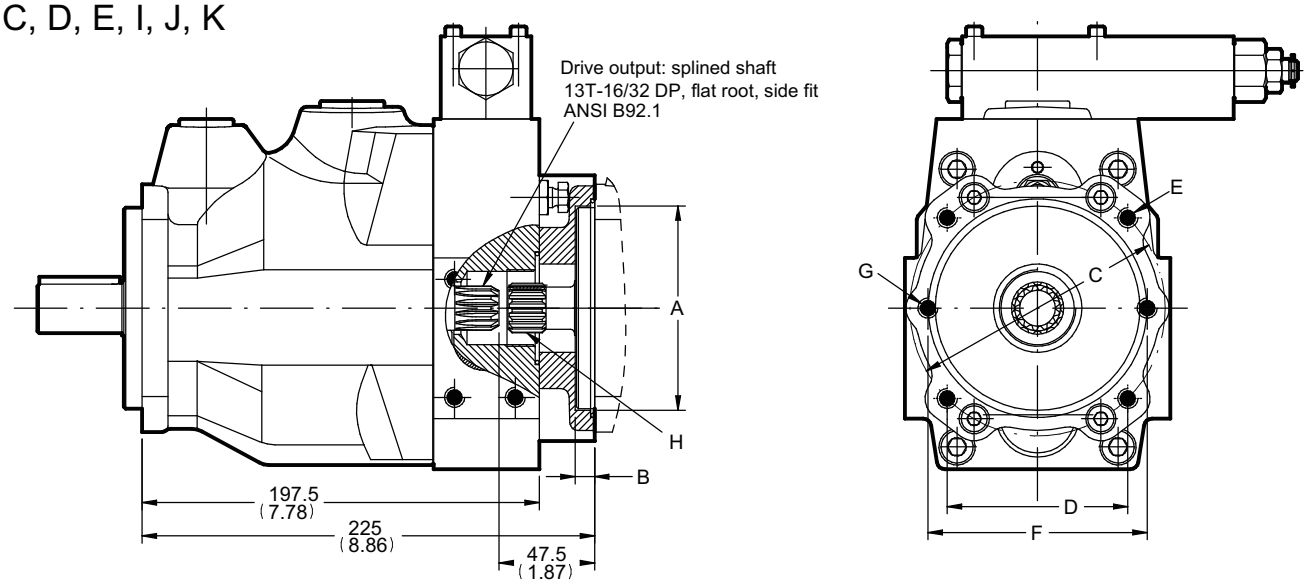

Thru shaft adaptors are available with the following dimensions							
thru code	A	B	C	D	E	F	G
I	63	10	85	-	M8	100	M8
J	80	10	103	-	M8	109	M10
K	100	10.5	125	-	M10	n. avail.	n. avail.
C	50.8	10	-	-	-	82	M8
D	82.55	10	-	-	-	106	M10
E	101.6	10.5	-	89.8	M10	n. avail.	n. avail.

Thread codes are 3 and 7, the dimensions E and G are UNC-2B threads

threads code: 3 and 7 Not standard, not in stock, require special requests.

Dimensions

YEOSHE

PV016 ~ PV023,PV028(Body 1) Inlet / Outlet Flange

Inlet Flange

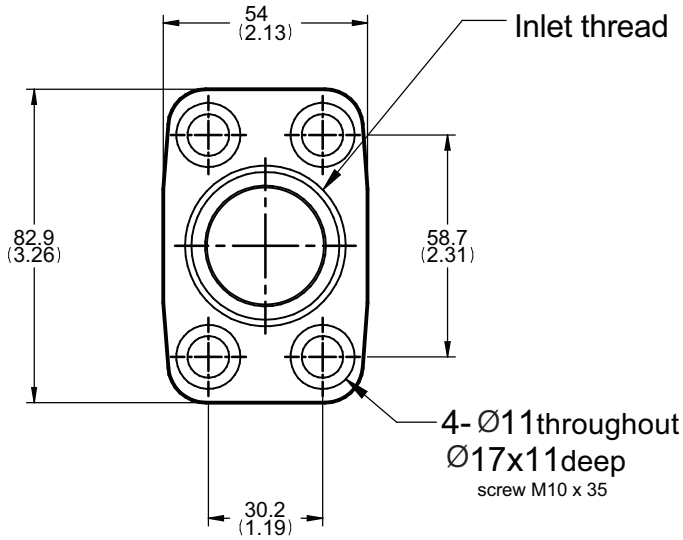

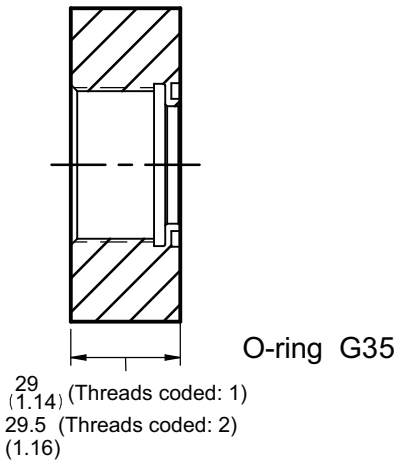

Outlet Flange

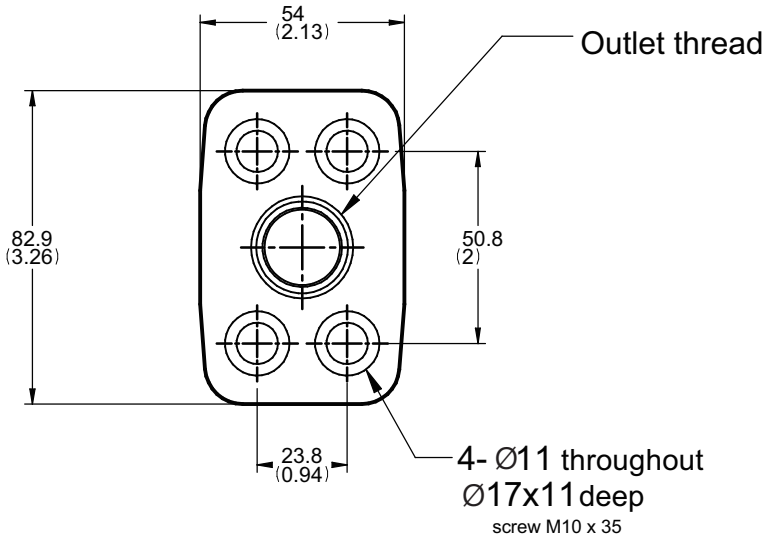

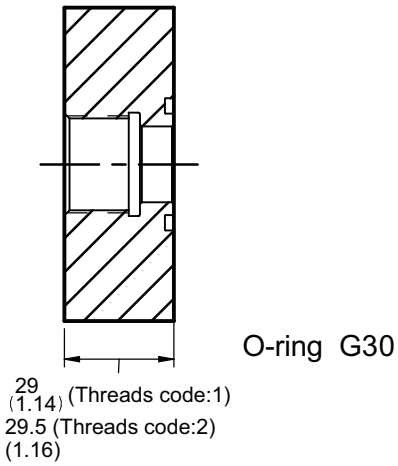

Ports

Thread code	3 UNF(SAE)	1 BSPP(G)	2 PT(RC)	7 ISO 6149(M)
Inlet	1 5/8”-12 UN	G 1 1/4”-11	PT 1 1/4”-11	M42*P2.0
Outlet	1 1/16”-12 UN	G 3/4”-14	PT3/4”-14	M27*P2.0

Threads code: 3 & 7 are not standard, not it stock, specially fabricate.

Efficiency and case drain flows

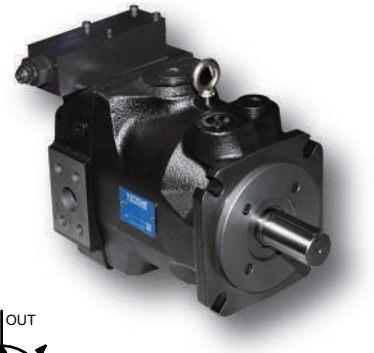

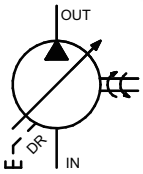

PV032 ~ PV046
PV056, PV065
(Body2)

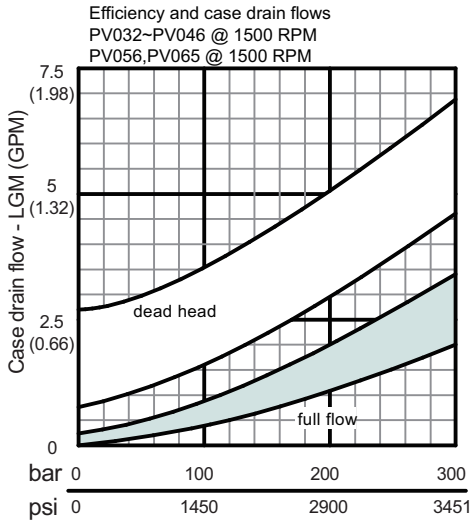

The efficiency and power graphs are measured at an input speed of n = 1500 RPM, a temperature of 40°C and a fluid viscosity of 46 mm2/s.
Case drain flow and compensator control flow leave via the drain port of the pump.
To the values shown are to be added 1 to 1.2 l/min , if at pilot operated compensators (codes G*, H*, P*, horse power compensator and p/Q-control) the control flow of the pressure pilot valve also goes through the pump.

Please note: The values shown below are only valid for static operation.
Under dynamic conditions and at rapid compensation of the pump the volume displaced by the servo piston also leaves the case drain port.
This dynamic control flow can reach up to 60 l/min! Therefore the case drain line is to lead to the reservoir at full size and without restrictions as short and direct as possible.

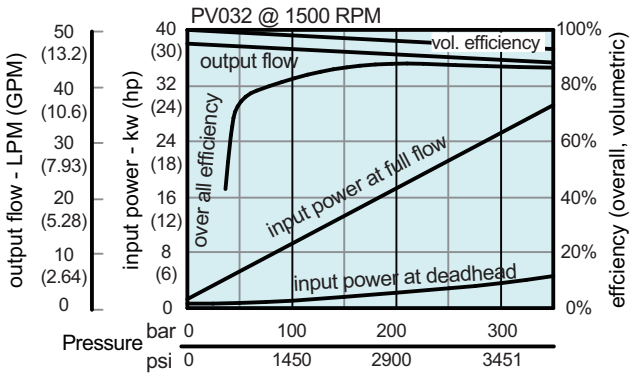

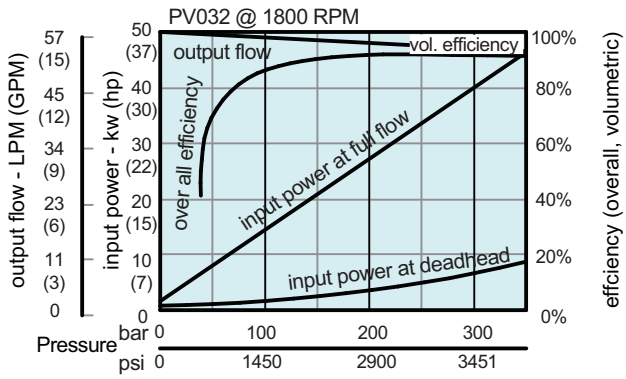

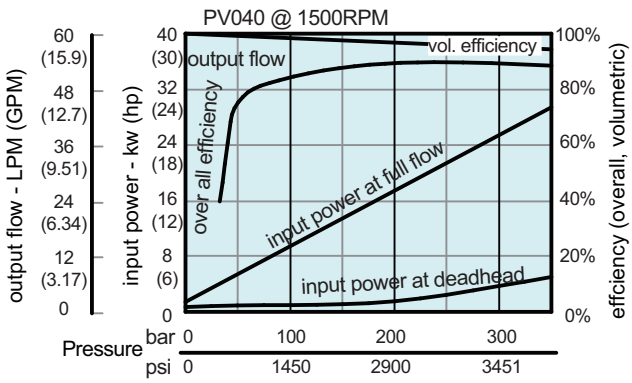

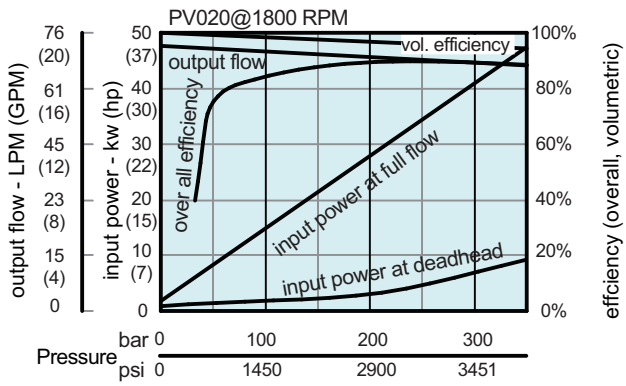

Efficiency and case drain flows

PV032 ~ PV046,PV056, PV065 (Body2)

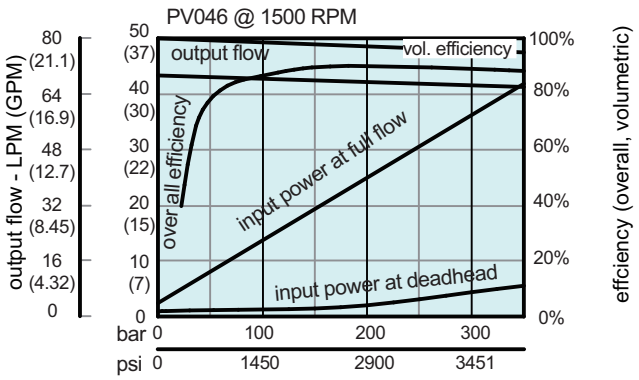

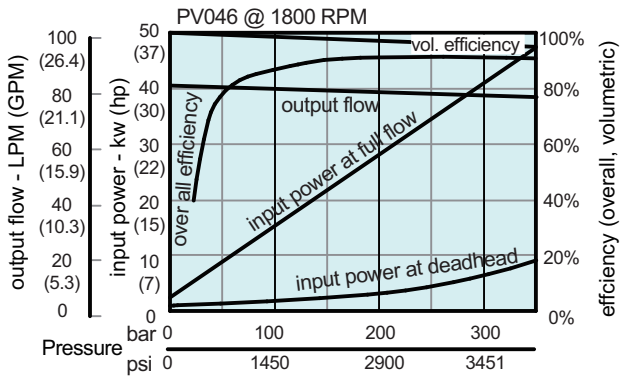

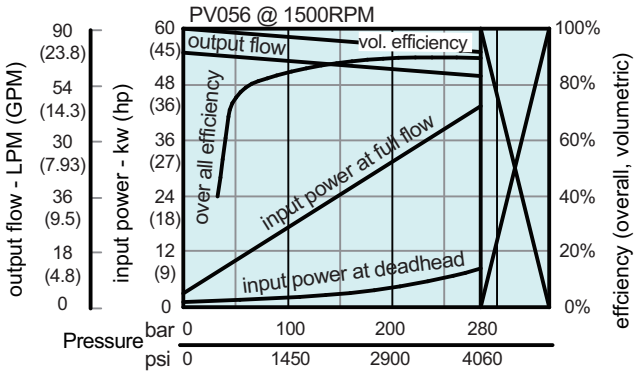

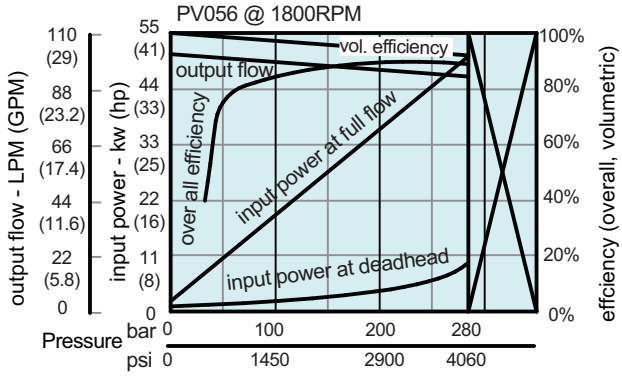

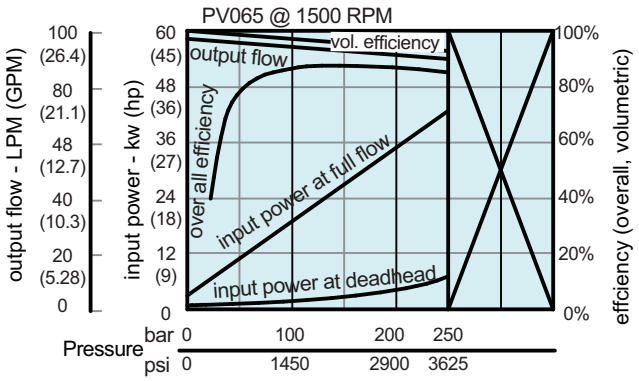

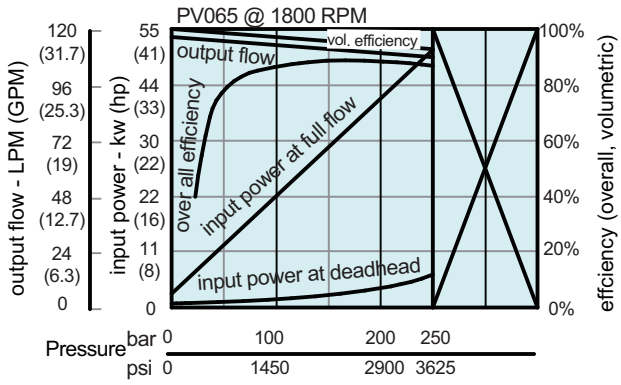

Dimension

PV032 ~ PV046,PV056, PV065 (Body 2)

Metric version (motor mounting Ø125)

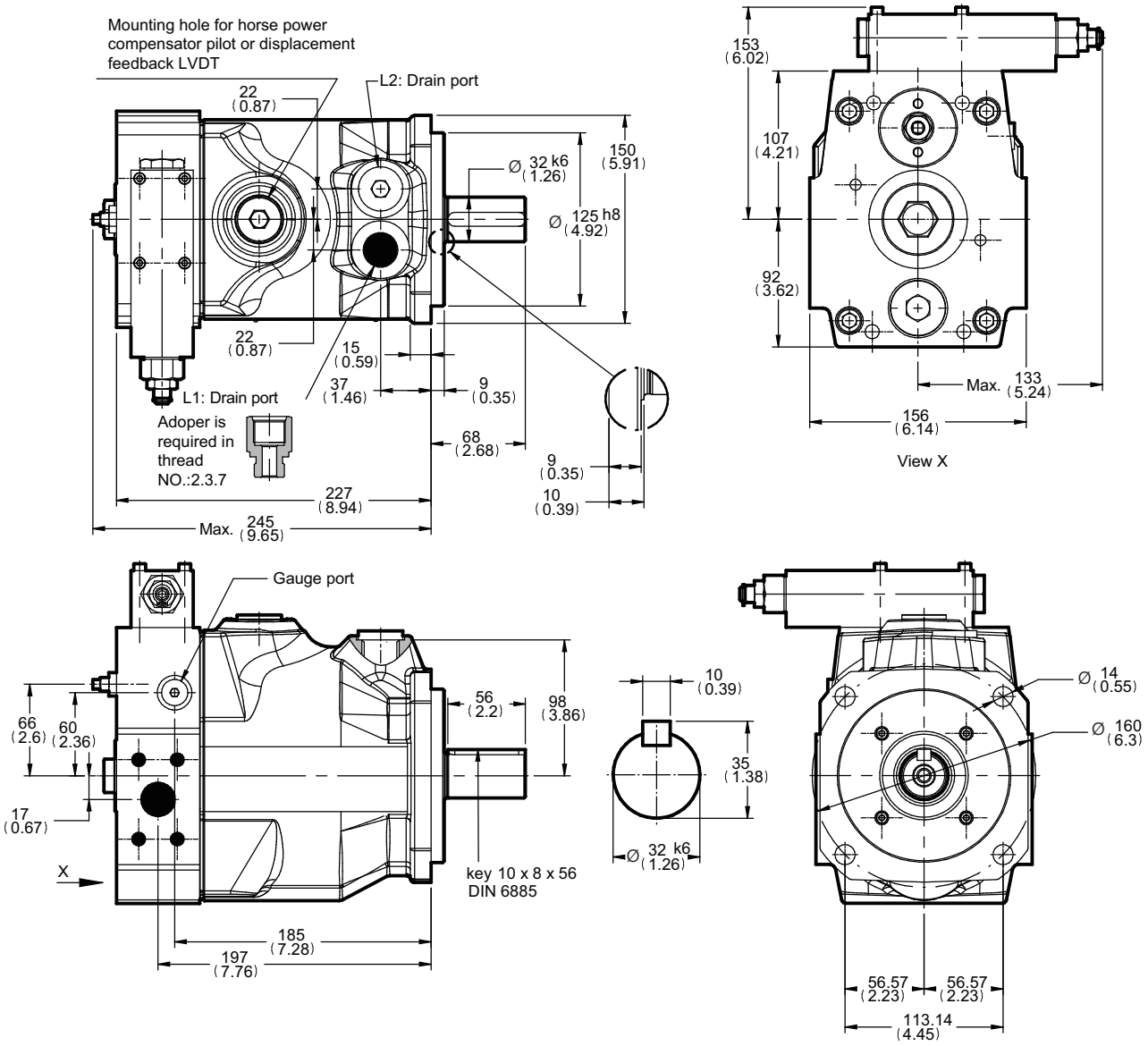

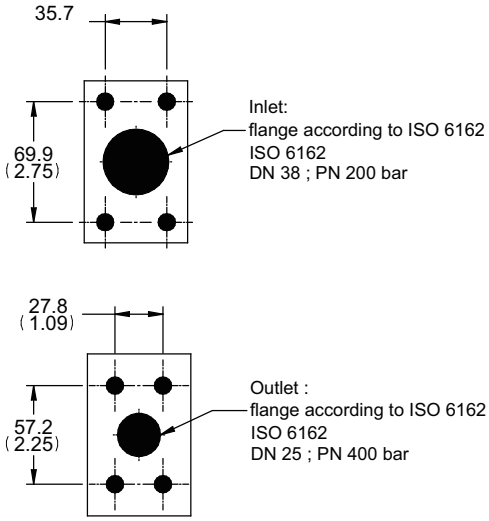

Ports

Thread	3 UNF(SAE)	1 BSPP(G)	2 PT(RC)	7 ISO 6149(M)
Inlet	Ø38 1/2”-13 UNC 18 deep	Ø38 M12*P1.75 18 deep	Ø38 M12*P1.75 18 deep	Ø38 M12*P1.75 18 deep
Outlet	Ø25 1/2”-13 UNC 18 deep	Ø25 M12*P1.75 18 deep	Ø25 M12*P1.75 18 deep	Ø25 M12*P1.75 18 deep
Drain port (L1/ L2)	1 1/16”-12 UNF	G 3/4”-14	PT 3/4”-14	M27*P2.0
Gauge port	7/16”-20 UNF	G 1/4”-19	PT 1/4”-19	M12*P1.5

Threads code: 3 & 7 are not standard, not it stock, specially fabricate.
Adoper is required in thread NO.: 2.3.7 (Drain port)

Dimension

YEOSHE

PV032 ~ PV046,PV056, PV065 (Body 2)

Metric version (motor mounting Ø125)

Shaft type

Mounting code: M

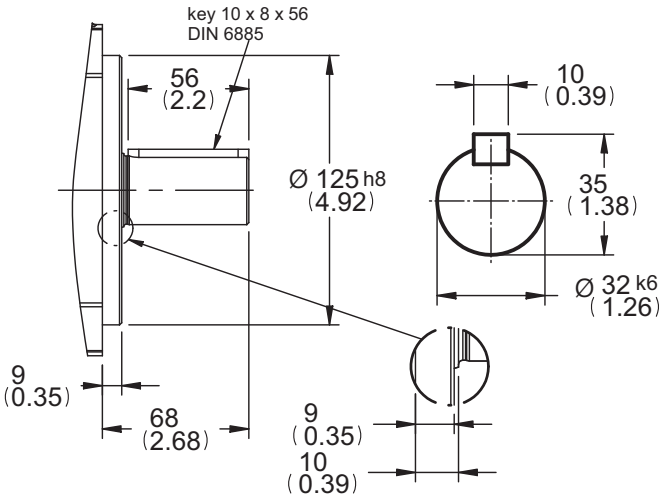

Mounting code: R

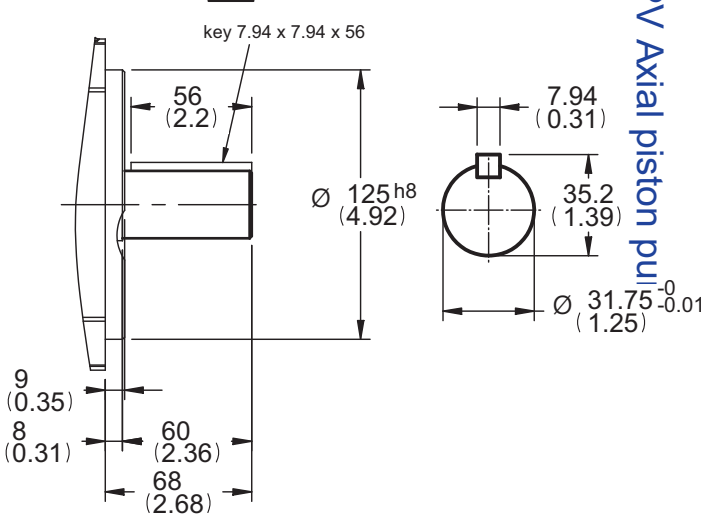

Mounting code: K

splined shaft W32 x 1.5 x 20 x 8f DIN 5480

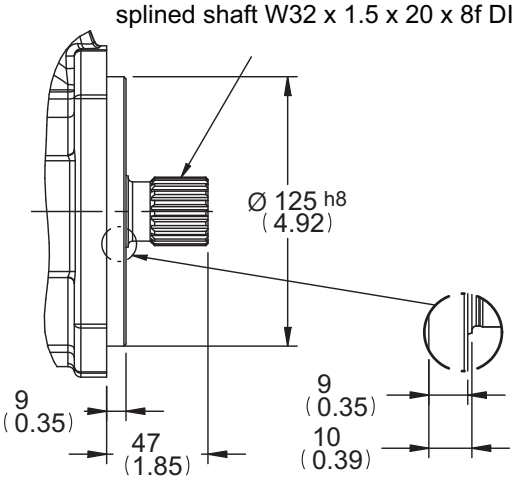

Mounting code: S

splined shaft 14T 12/24 DP, flat root, side fit
ANSI B92.1

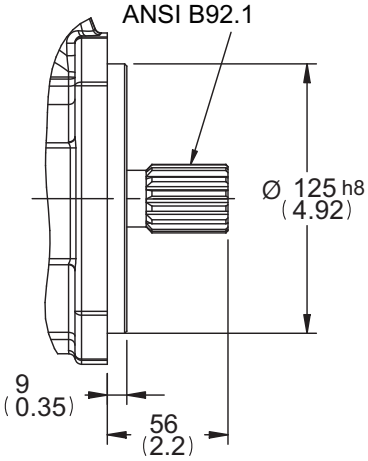

Mounting code: P

splined shaft 15T 16/32 DP, flat root, side fit
ANSI B92.1

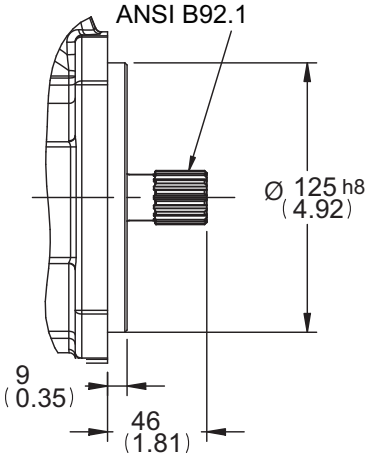

Dimension

PV032 ~ PV046, PV056, PV065 (Body 2)

SAE version (motor mounting Ø127)

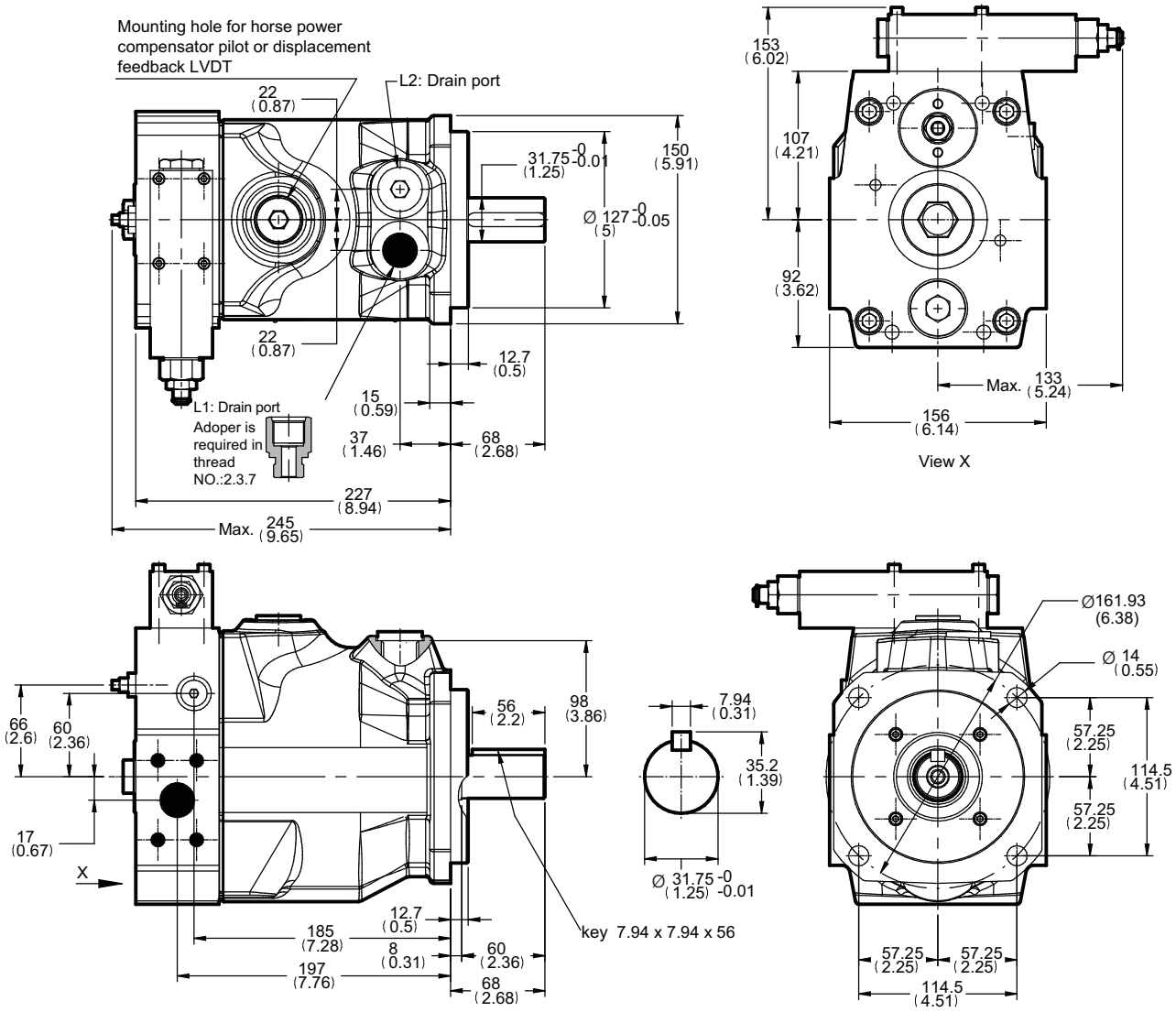

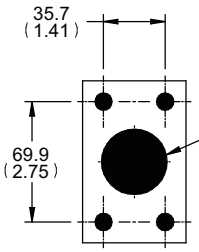

Inlet :
flange according to ISO 6162
ISO 6162
DN 38 ; PN 200 bar

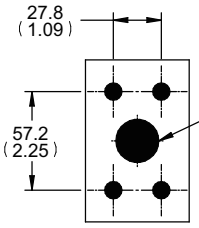

Outlet :
flange according to ISO 6162
ISO 6162
DN 25 ; PN 400 bar

Ports

Thread	3 UNF(SAE)	1 BSPP(G)	2 PT(RC)	7 ISO 6149(M)
Inlet	Ø38 1/2”-13 UNC 18 deep	Ø38 M12*P1.75 18 deep	Ø38 M12*P1.75 18 deep	Ø38 M12*P1.75 18 deep
Outlet	Ø25 1/2”-13 UNC 18 deep	Ø25 M12*P1.75 18 deep	Ø25 M12*P1.75 18 deep	Ø25 M12*P1.75 18 deep
Drain port (L1/ L2)	1 1/16”-12 UNF	G 3/4”-14	PT 3/4”-14	M27*P2.0
Gauge port	7/16”-20 UNF	G 1/4”-19	PT 1/4”-19	M12*P1.5

Threads code: 3 & 7 are not standard, not it stock, specially fabricate.
Adoper is required in thread NO.: 2.3.7 (Drain port)

Dimension

YEOSHE

PV032 ~ PV046, PV056, PV065 (Body 2)

SAE version (motor mounting Ø127)

Shaft type

Mounting code: N

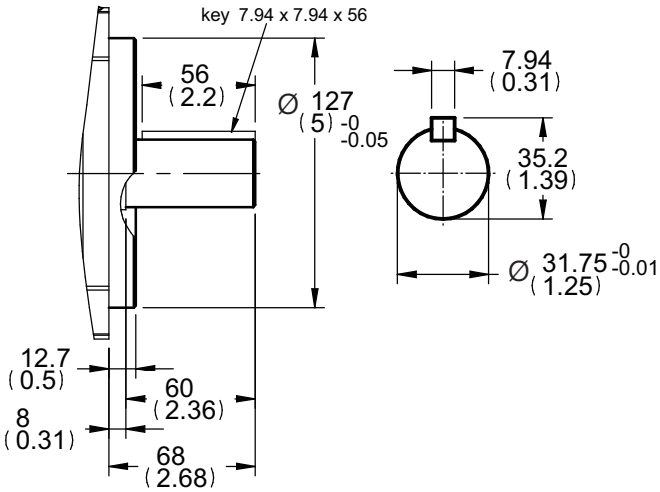

Mounting code: J

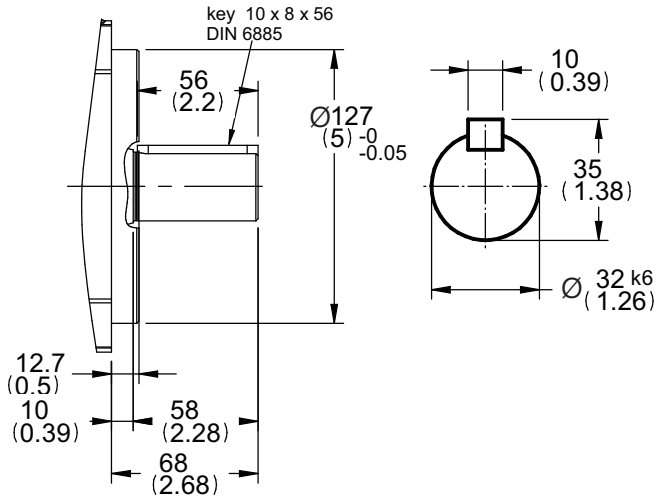

Mounting code: D

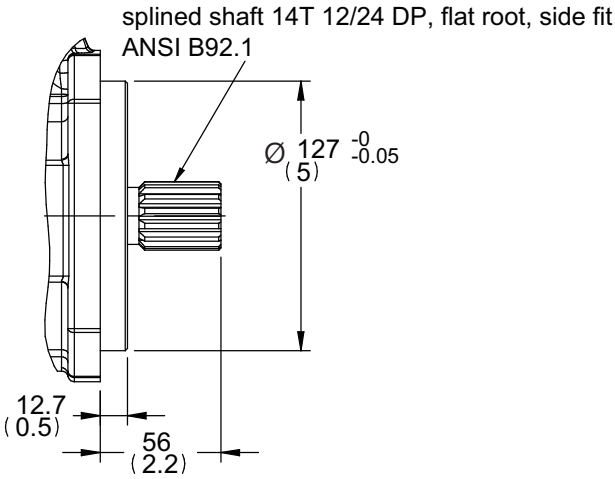

Mounting code: U

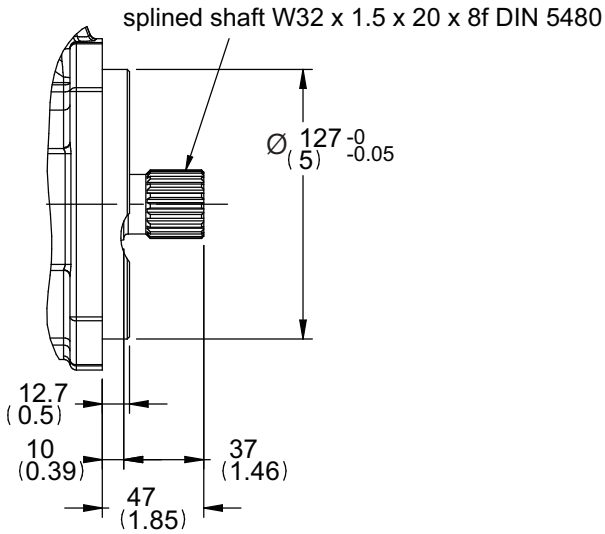

Mounting code: G

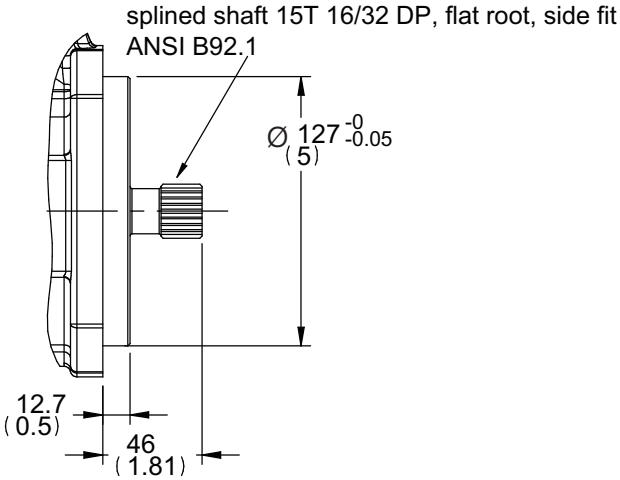

Dimension

PV032 ~ PV046, PV056, PV065 (Body 2)

Thru drive

thru drive:
D, E, F, I, J, K, L

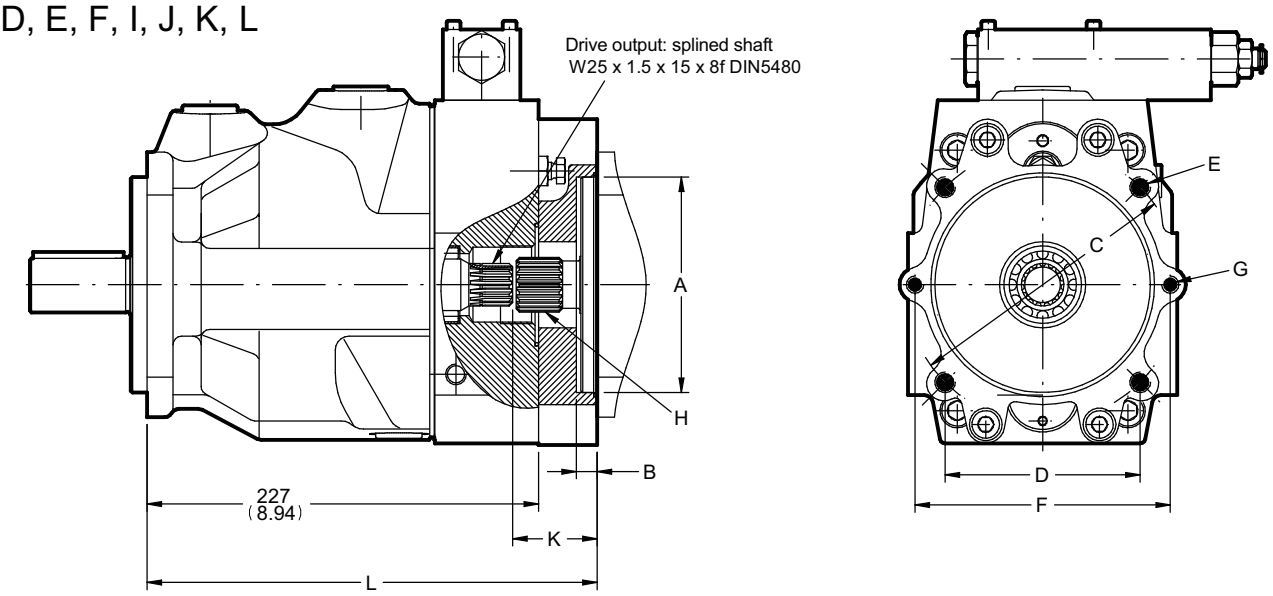

Thru shaft adaptors are available with the following dimensions:									
thru code	A	B	C	D	E	F	G	K	L
I	63	8.5	85	-	M8	100	M8	49	261
J	80	8.5	103	-	M8	109	M10	49	261
K	100	10.5	125	-	M10	140	M12	49	261
L	125	12	160	-	M12	n. avail.	n. avail.	49	261
D	82.55	8	-	-	-	106	M10	49	261
E	101.6	11	-	89.8	M10	146	M12	49	261
F	127	13.5	-	114.5	M12	n. avail.	n. avail.	64	276

Thread codes are 3 and 7
the dimensions E and G are
UNC-2B threads

threads code: 3 and 7 Not standard, not in stock require special requests

Dimension

YEOSHE

PV032 ~ PV046, PV056, PV065 (Body 2) Inlet / Outlet Flange

Inlet Flange

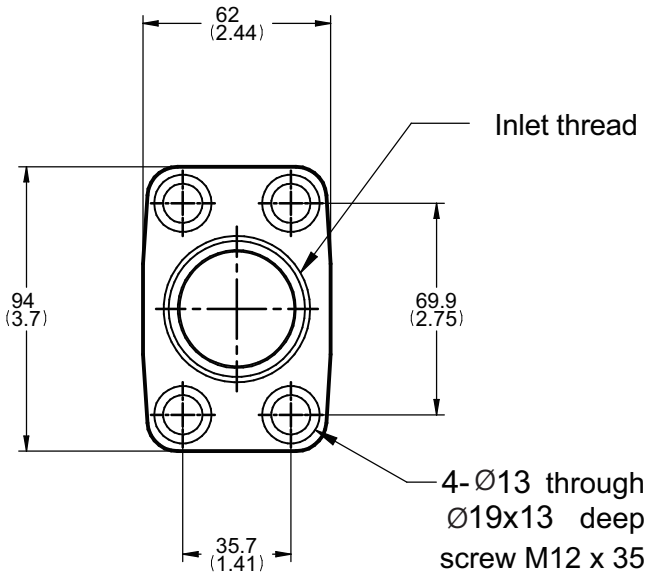

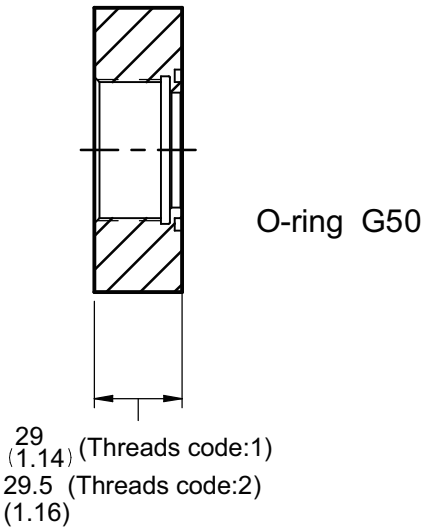

Outlet Flange

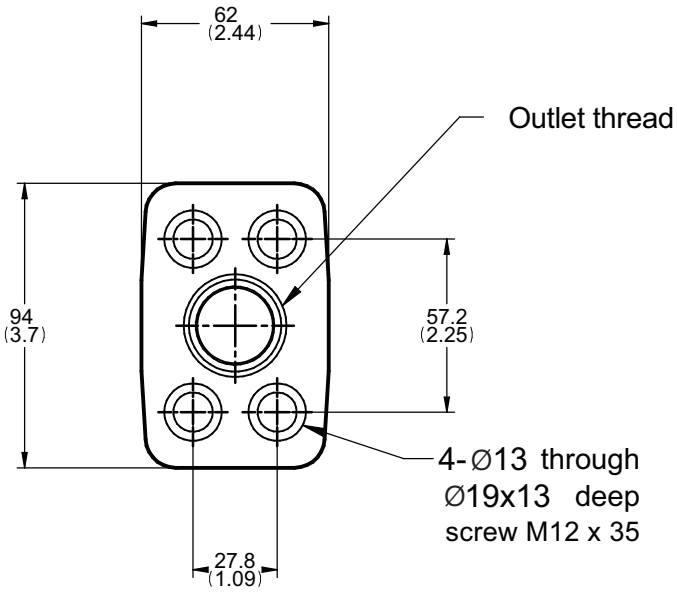

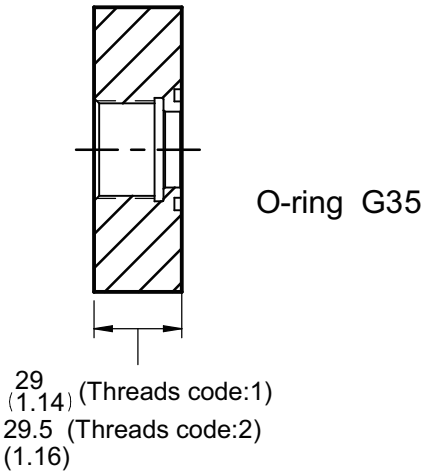

Ports

Thread code	3 UNF(SAE)	1 BSPP(G)	2 PT(RC)	7 ISO 6149(M)
Inlet	1 7/8”-12 UN	G 1 1/2”-11	PT 1 1/2”-11	M48*P2.0
Outlet	1 5/16”-12 UN	G 1”-11	PT 1”-11	M33*P2.0

threads code: 3 & 7 are not standard, not it stock, specially fabricate.

Efficiency and case drain flows

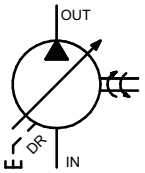

PV063 ~ PV092
PV110 (Body 3)

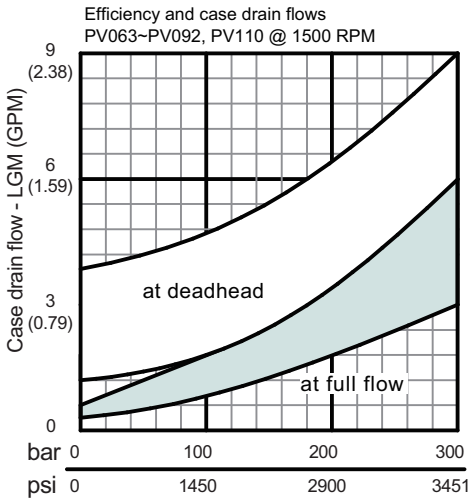

The efficiency and power graphs are measured at an input speed of n = 1500 RPM, a temperature of 40°C and a fluid viscosity of 46 mm2/s.
Case drain flow and compensator control flow leave via the drain port of the pump. To the values shown are to be added 1 to 1.2 l/min , if at pilot operated compensators (codes G*, H*, P*, horse power compensator and p/Q-control) the control flow of the pressure pilot valve also goes through the pump.

Please note: The values shown below are only valid for static operation. Under dynamic conditions and at rapid compensation of the pump the volume displaced by the servo piston also leaves the case drain port.
This dynamic control flow can reach up to 80 l/min! Therefore the case drain line is to lead to the reservoir at full size and without restrictions as short and direct as possible.

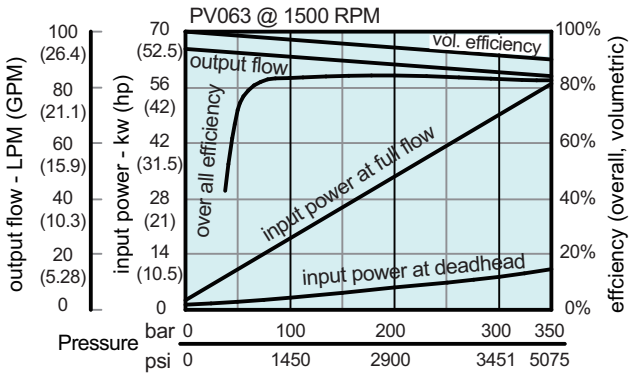

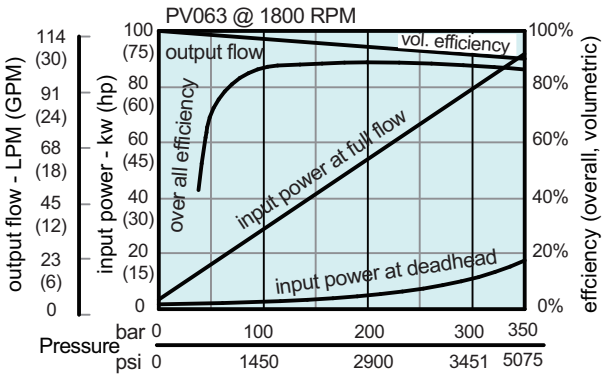

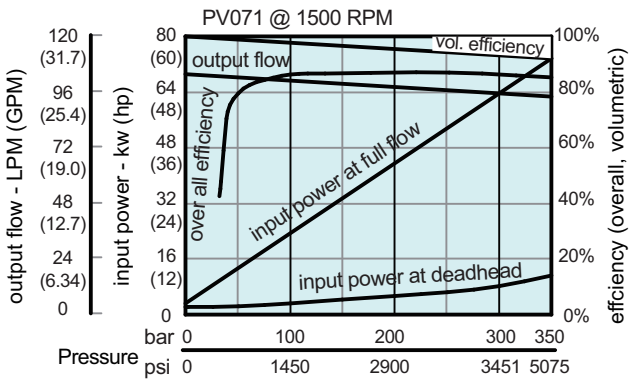

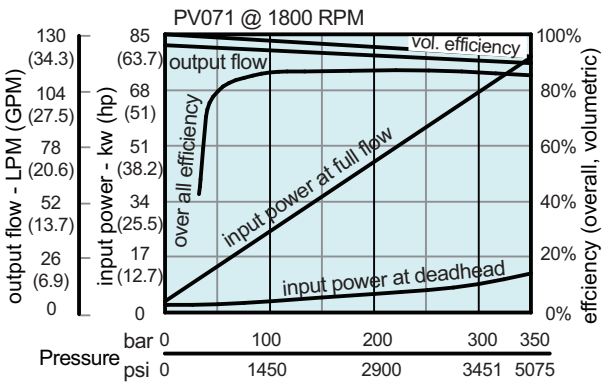

Efficiency and case drain flows

YEOSHE

PV063 ~ PV092, PV110 (Body 3)

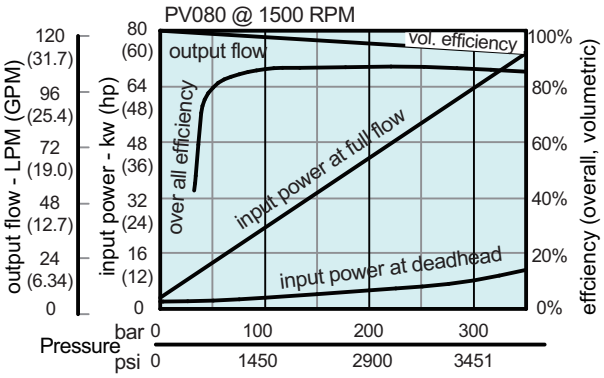

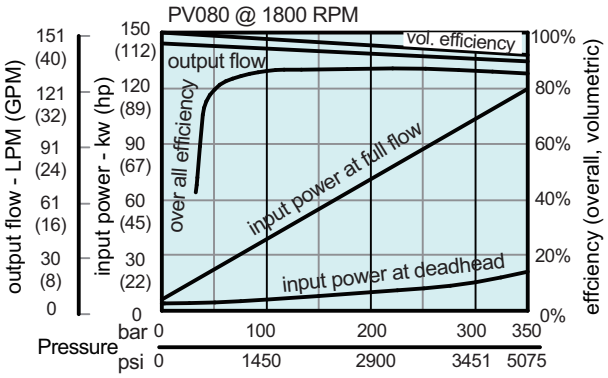

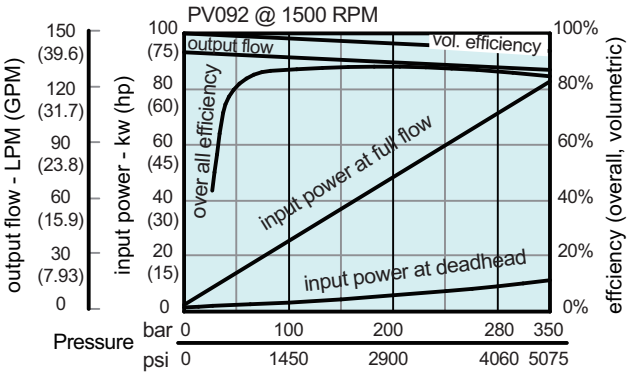

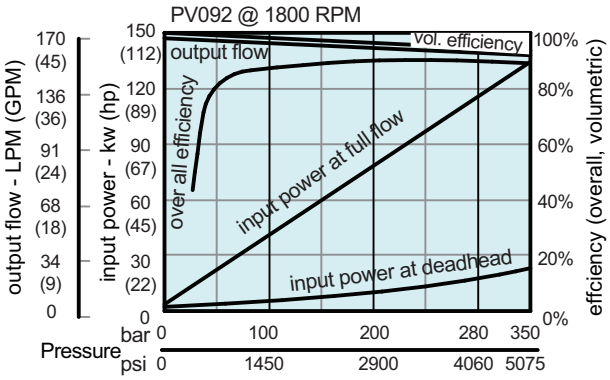

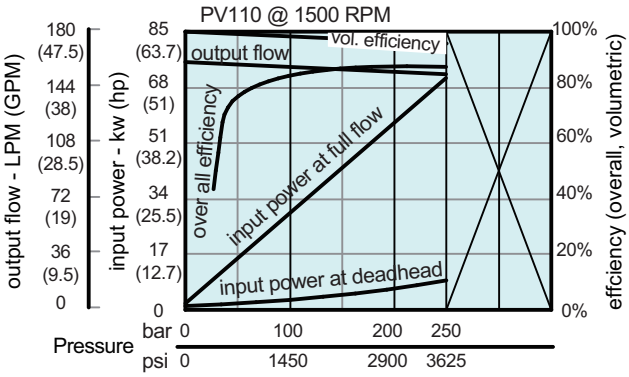

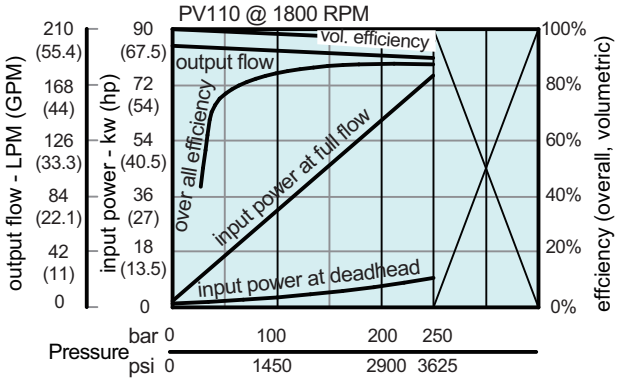

Dimension

PV063 ~ PV092, PV110 (Body 3)

Metric version (motor mountingØ160)

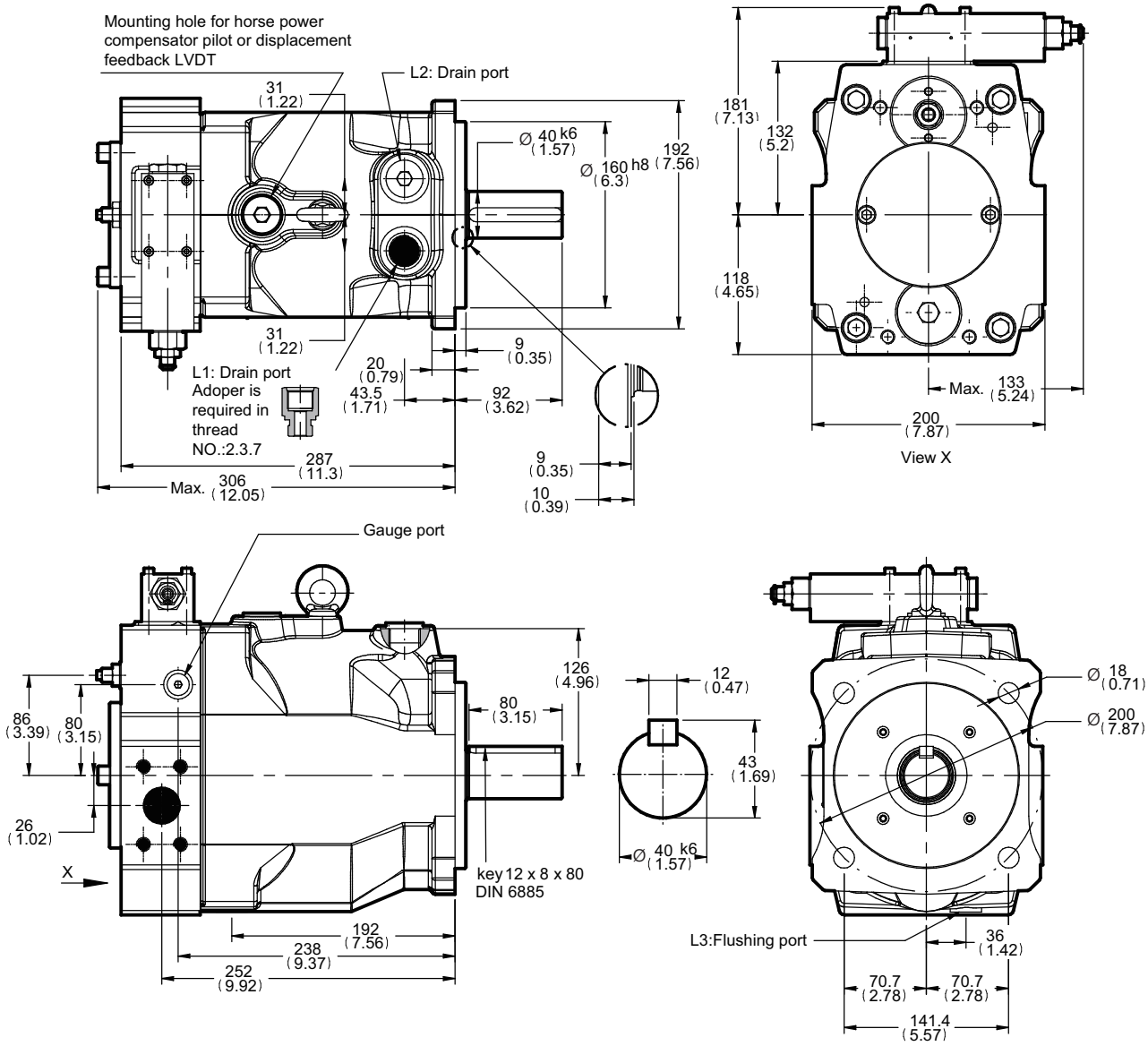

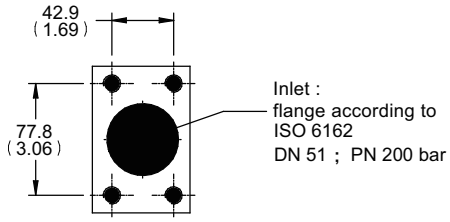

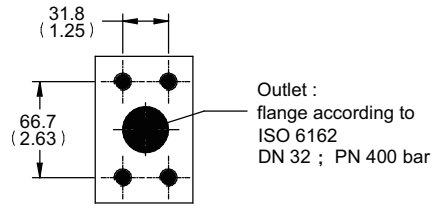

Ports

Thread	3 UNF(SAE)	1 BSPP(G)	2 PT(RC)	7 ISO 6149(M)
Inlet	Ø47 1/2”-13 UNC 20 deep	Ø47 M12*P1.75 20 deep	Ø47 M12*P1.75 20 deep	Ø47 M12*P1.75 20 deep
Outlet	Ø32 1/2”-13 UNC 20 deep	Ø32 M12*P1.75 20 deep	Ø32 M12*P1.75 20 deep	Ø32 M12*P1.75 20 deep
Drain port (L1/ L2)	1 1/16”-12 UNF	G 3/4”-14	PT 3/4”-14	M27*P2.0
L3	7/8”-14 UNF	G 1/2”-14	PT 1/2”-14	M22*P1.5
Gauge port	7/16”-20 UNF	G 1/4”-19	PT 1/4”-19	M12*P1.5

Threads code: 3 & 7 are not standard, not it stock, specially fabricate.
Adoper is required in thread NO.:2.3.7 (Drain port)

Dimension

YEOSHE

PV063 ~ PV092, PV110 (Body3)

Metric version (motor mounting Ø160)

Shaft type

Mounting code: M

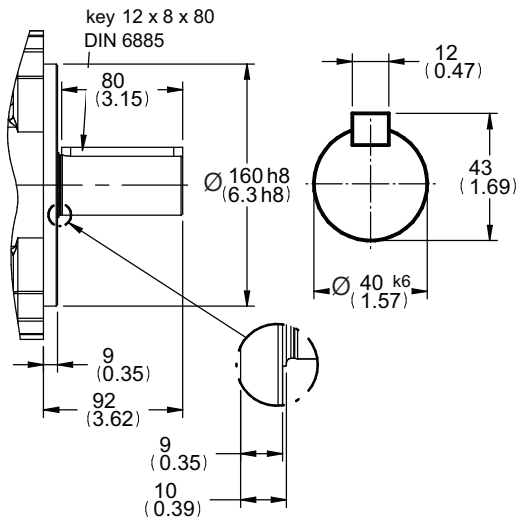

Mounting code: R

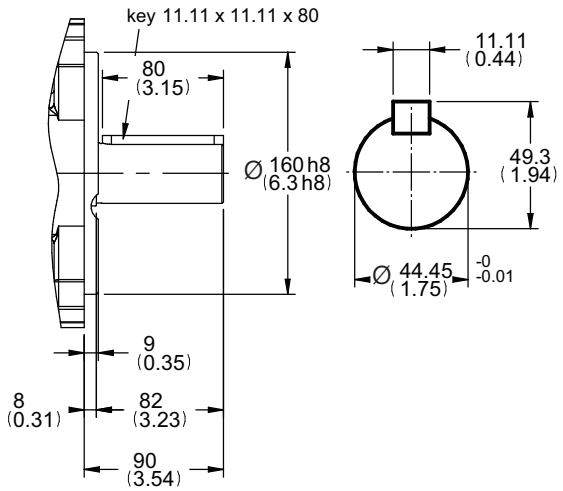

Mounting code: K

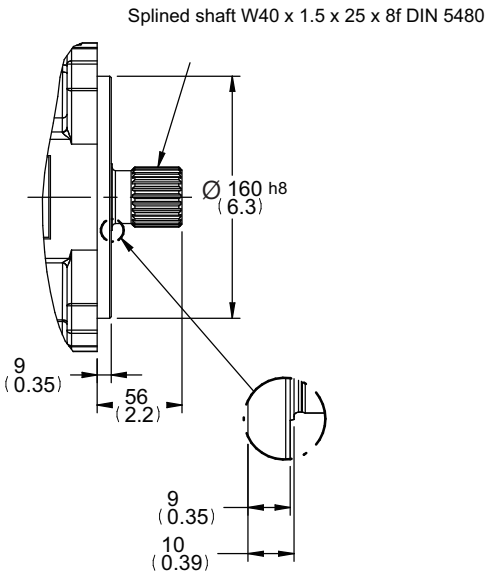

Mounting code: S

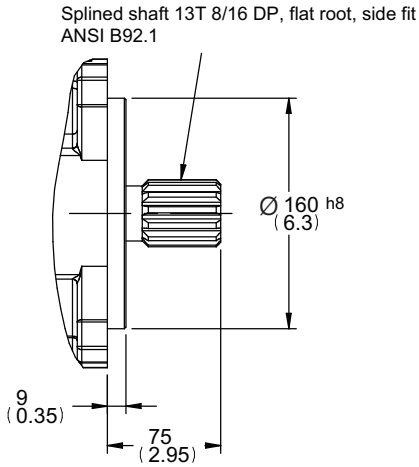

Dimension

PV063 ~ PV092, PV110 (Body 3)

SAE version(motor mounting Ø152.4)

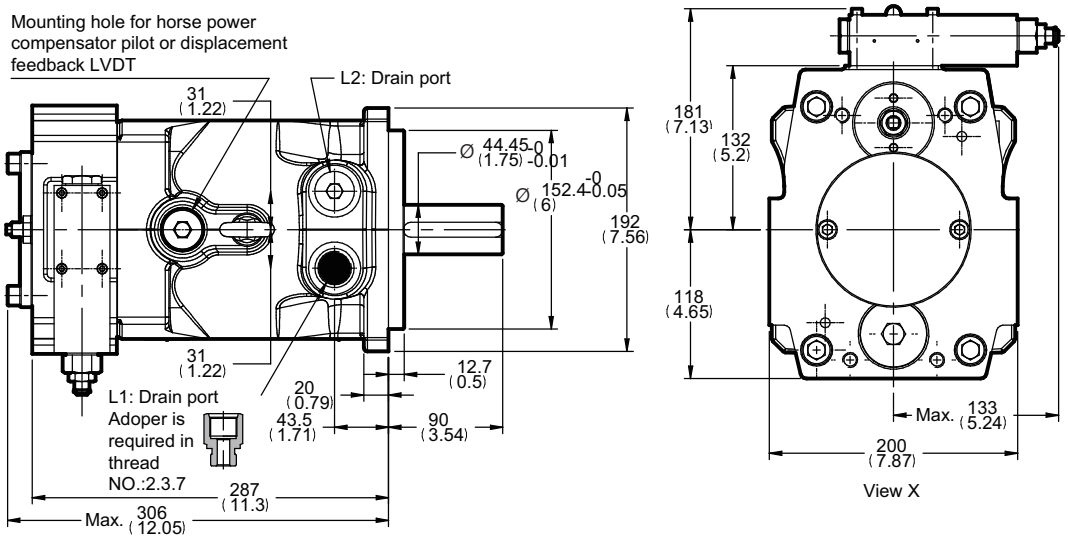

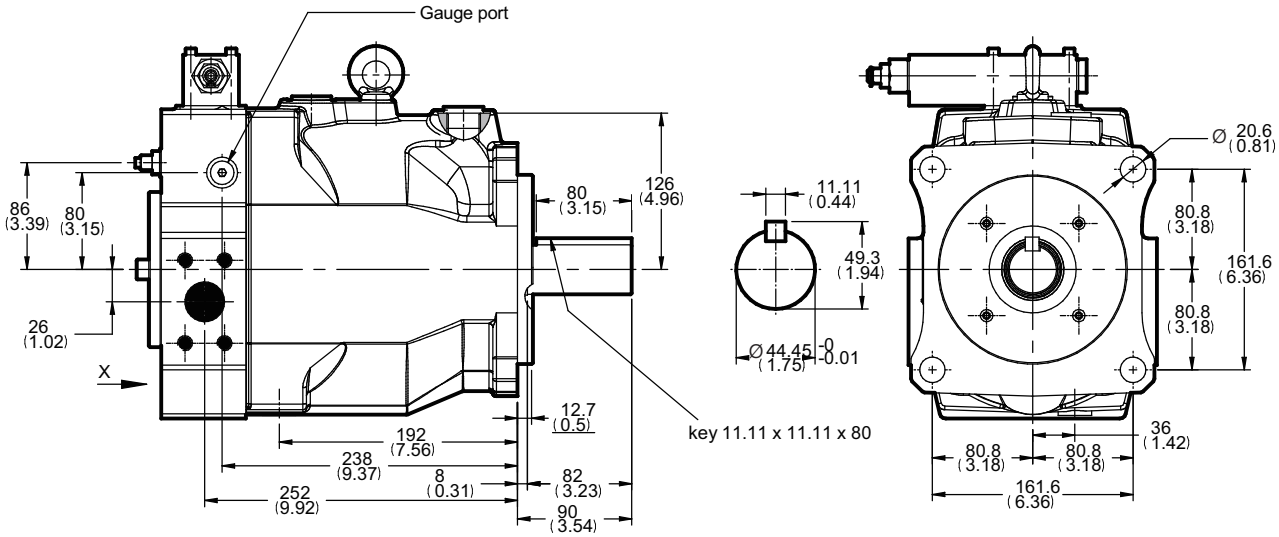

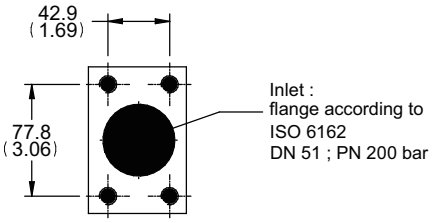

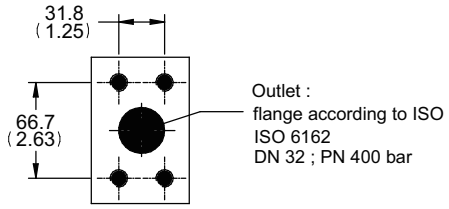

Ports

Thread	3 UNF(SAE)	1 BSPP(G)	2 PT(RC)	7 ISO 6149(M)
Inlet	Ø47 1/2”-13 UNC 20 deep	Ø47 M12*P1.75 20 deep	Ø47 M12*P1.75 20 deep	Ø47 M12*P1.75 20 deep
Outlet	Ø32 1/2”-13 UNC 20 deep	Ø32 M12*P1.75 20 deep	Ø32 M12*P1.75 20 deep	Ø32 M12*P1.75 20 deep
Drain port (L1/ L2)	1 1/16”-12 UNF	G 3/4”-14	PT 3/4”-14	M27*P2.0
L3	7/8”-14 UNF	G 1/2”-14	PT 1/2”-14	M22*P1.5
Gauge port	7/16”-20 UNF	G 1/4”-19	PT 1/4”-19	M12*P1.5

Threads code: 3 & 7 are not standard, not it stock, specially fabricate.
Adoper is required in thread NO.:2.3.7 (Drain port)

Dimension

YEOSHE

PV063 ~ PV092, PV110 (Body 3)

SAE version(motor mounting Ø152.4)

Shaft type

Mounting: N

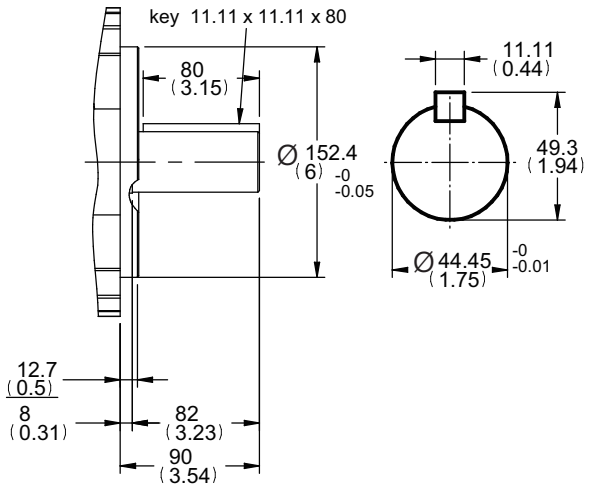

Mounting: J

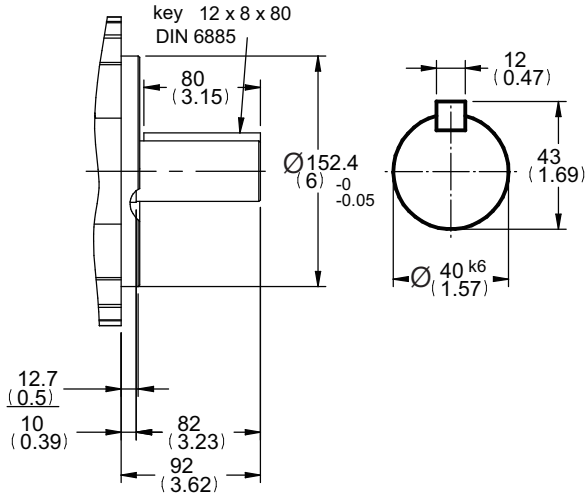

Mounting: D

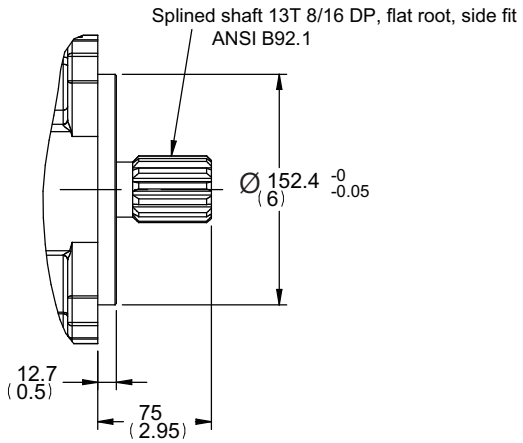

Mounting: U

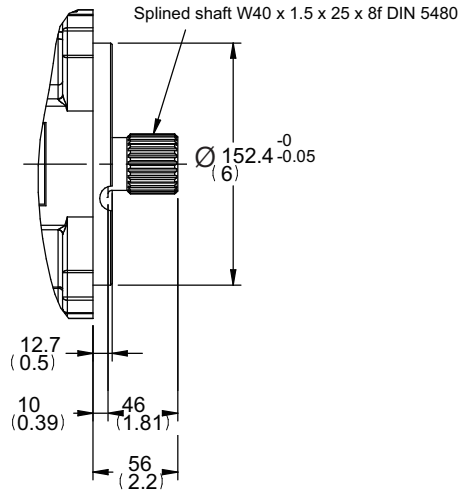

Dimension

PV063 ~ PV092, PV110 (Body 3)

Thru drive

thru drive:
D, E, F, G, I, J, K, L, M

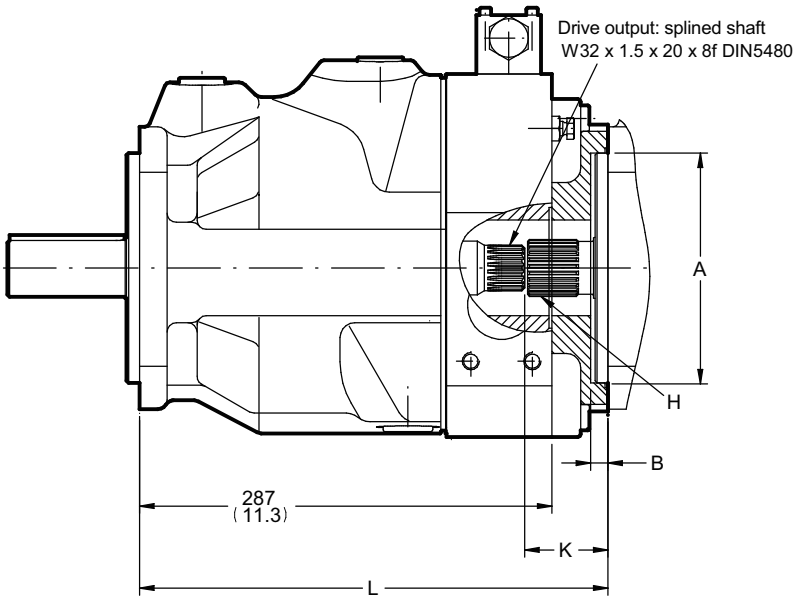

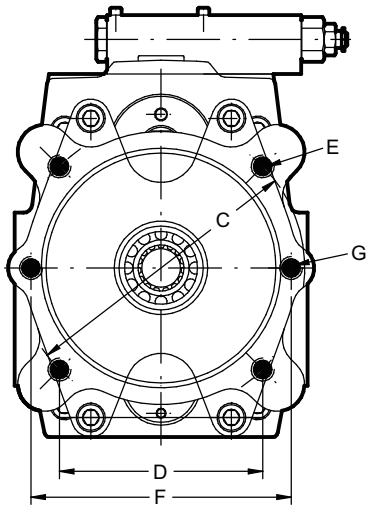

Thru shaft adaptors are available with the following dimensions:									
Thru code	A	B	C	D	E	F	G	K	L
I	63	10	85	-	M8	100	M8	58	326
J	80	10	103	-	M8	109	M10	58	326
K	100	12	125	-	M10	140	M12	58	326
L	125	12	160	-	M12	180	M16	58	326
M	160	12	200	-	M16	n. avail.	n. avail.	58	326
D	82.55	10	-	-	-	106	M10	58	326
E	101.6	12	-	89.8	M10	146	M12	58	326
F	127	14	-	114.5	M12	181	M16	58	326
G	152.4	14	-	161.6	M16	n. avail.	n. avail.	78	346

Thread codes are 3 and 7 the dimensions E and G are UNC-2B threads

threads code: 3 and 7 Not standard, not in stock require special requests.

Dimension

YEOSHE

PV063 ~ PV092, PV110 (Body 3) Inlet / Outlet Flange

Inlet Flange

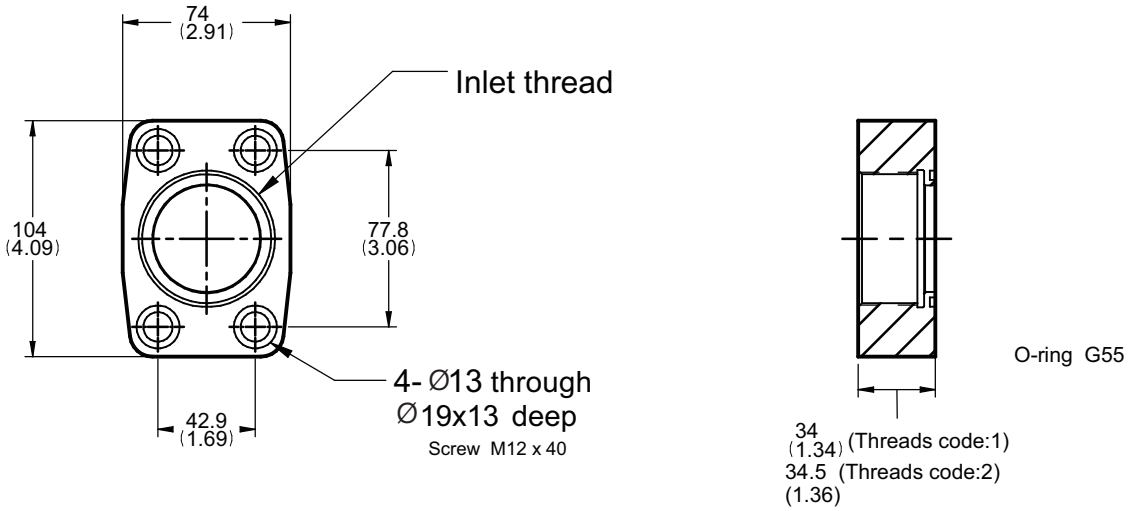

Outlet Flange

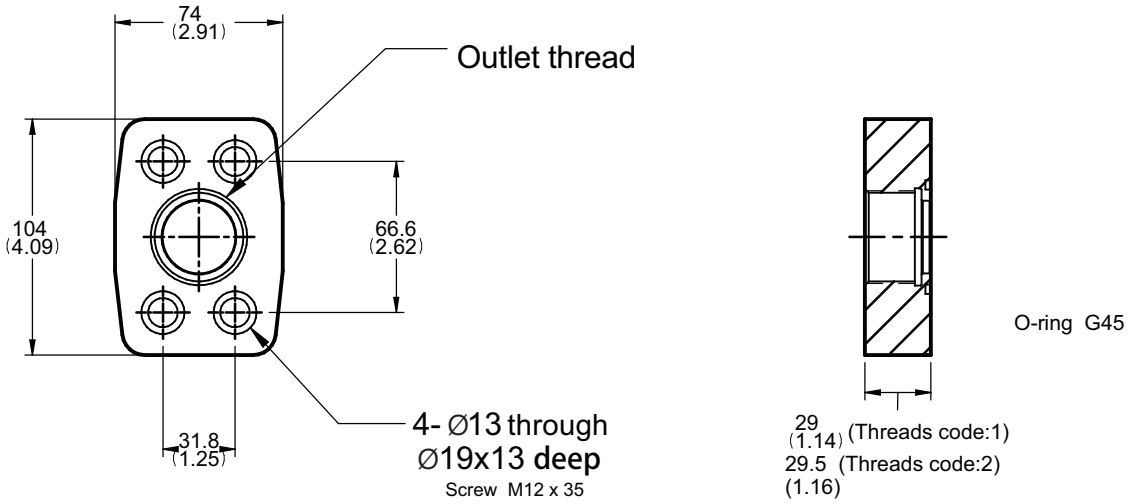

Ports

Thread code	3 UNF(SAE)	1 BSPP(G)	2 PT(RC)	7 ISO 6149(M)
Inlet	2 1/2”-12 UN	G 2”-11	PT 2”-11	M33*P2.0
Outlet	1 5/8”-12 UN	G 1 1/4”-11	PT1 1/4”-11	M42*P2.0

Threads code: 3 & 7 are not standard, not it stock, specially fabricate.

Efficiency and case drain flows

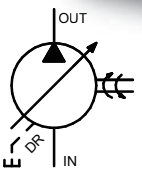

PV125 ~ PV180
PV210 (Body 4)

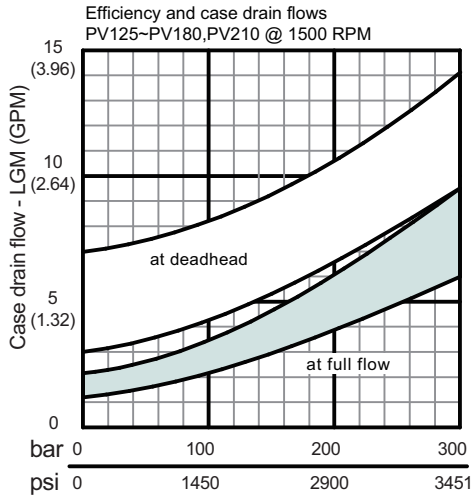

The efficiency and power graphs are measured at an input speed of n = 1500 RPM, a temperature of 40°C and a fluid viscosity of 46 mm2/s.
Case drain flow and compensator control flow leave via the drain port of the pump.
To the values shown are to be added 1 to 1.2 l/min , if at pilot operated compensators (codes G*, H*, P*, horse power compensator and p/Q*control) the control flow of the pressure pilot valve also goes through the pump.
Please note: The values shown below are only valid for static operation.

Under dynamic conditions and at rapid compensation of the pump the volume displaced by the servo piston also leaves the case drain port.
This dynamic control flow can reach up to 40 l/min! Therefore the case drain line is to lead to the reservoir at full size and without restrictions as short and direct as possible.

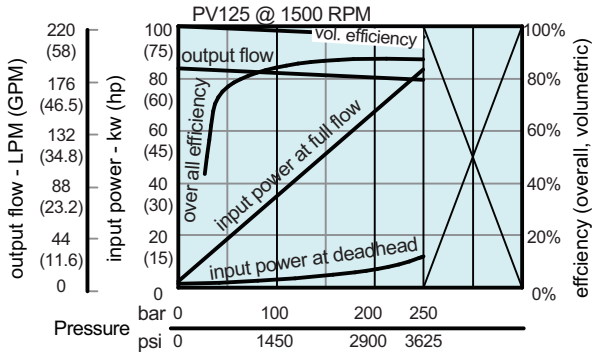

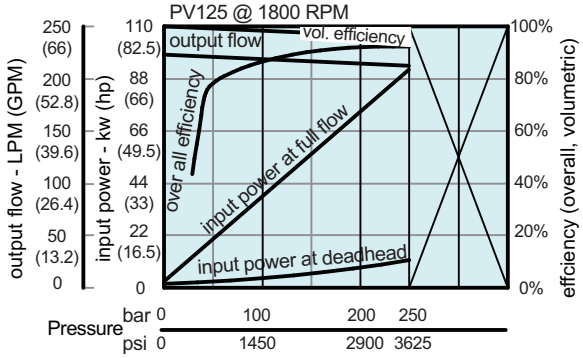

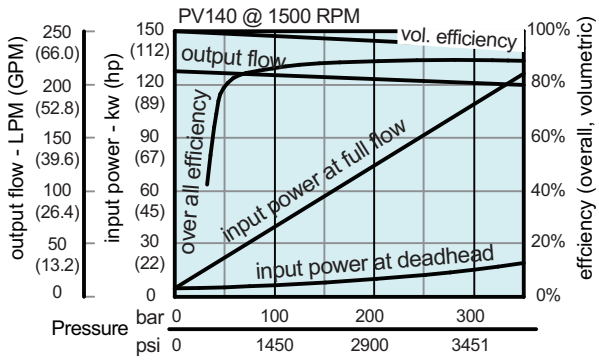

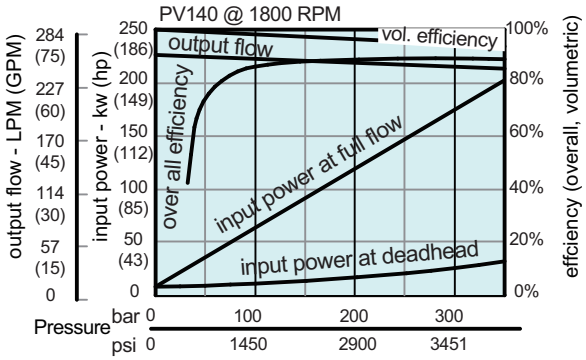

Efficiency and case drain flows

YEOSHE

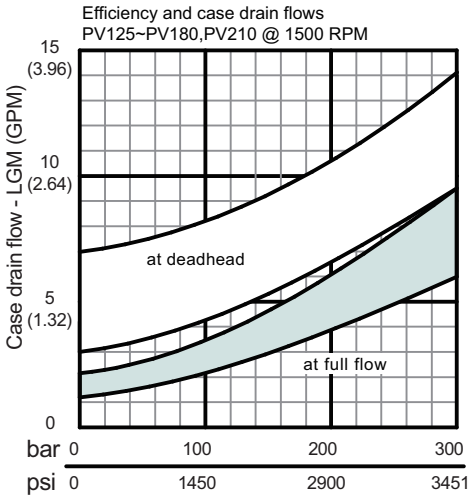

The efficiency and power graphs are measured at an input speed of n = 1500 RPM, a temperature of 40°C and a fluid viscosity of 46 mm2/s.
Case drain flow and compensator control flow leave via the drain port of the pump.
To the values shown are to be added 1 to 1.2 l/min , if at pilot operated compensators (codes G*, H*, P*, horse power compensator and p/Q*control) the control flow of the pressure pilot valve also goes through the pump.
Please note: The values shown below are only valid for static operation.

Under dynamic conditions and at rapid compensation of the pump the volume displaced by the servo piston also leaves the case drain port.
This dynamic control flow can reach up to 40 l/min! Therefore the case drain line is to lead to the reservoir at full size and without restrictions as short and direct as possible.

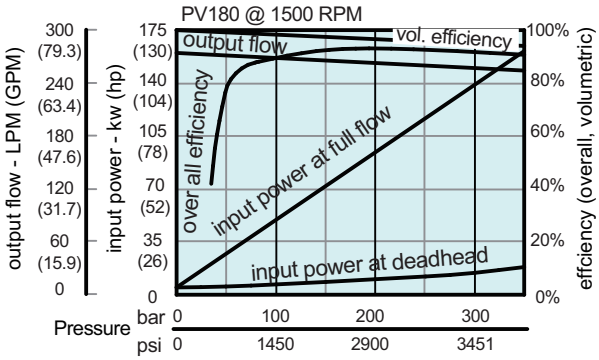

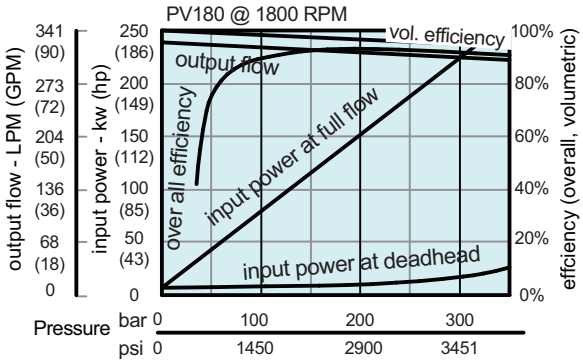

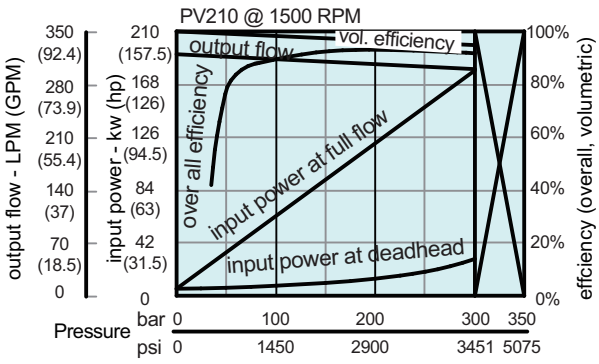

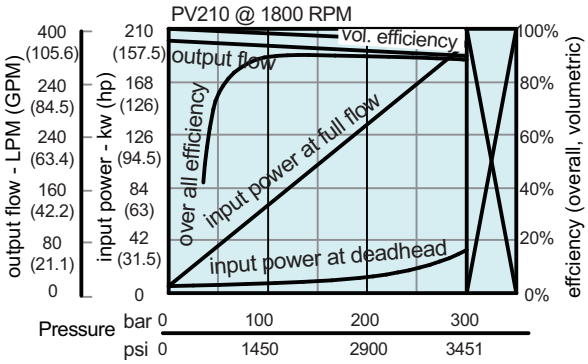

Dimension

PV125 ~ PV180, PV210 (Body 4)

Metric version (motor mounting Ø160)

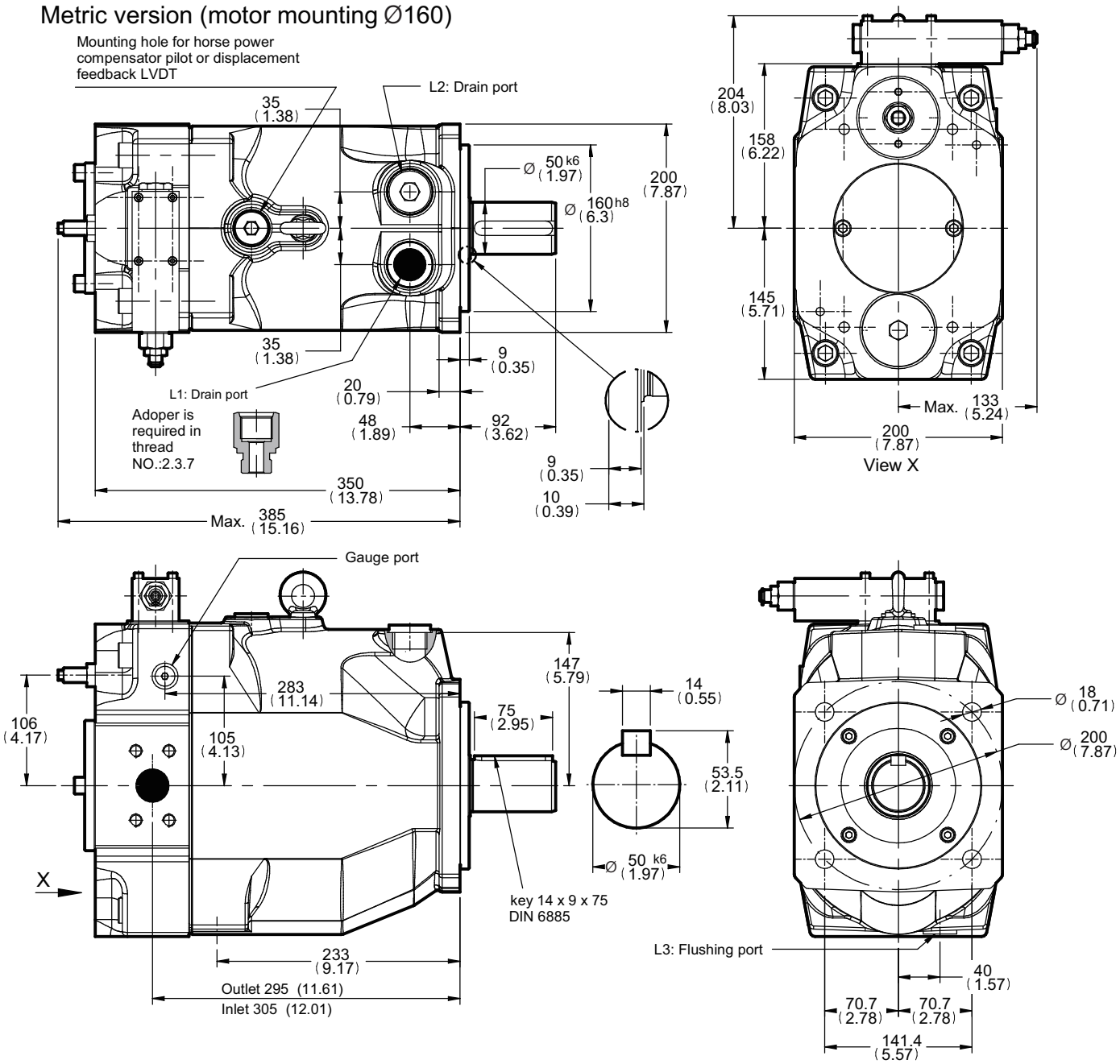

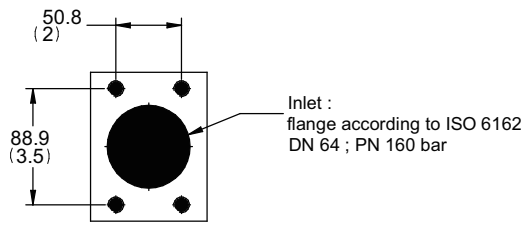

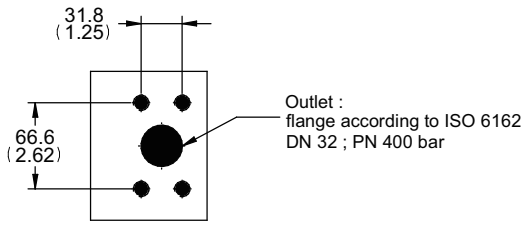

Ports

Thread	3 UNF(SAE)	1 BSPP(G)	2 PT(RC)	7 ISO 6149(M)
Inlet	Ø64 1/2”-13 UNC 20 deep	Ø64 M12*P1.75 20 deep	Ø64 M12*P1.75 20 deep	Ø64 M12*P1.75 20 deep
Outlet	Ø32 1/2”-13 UNC 20 deep	Ø32 M12*P1.75 20 deep	Ø32 M12*P1.75 20 deep	Ø32 M12*P1.75 20 deep
Drain port (L1/ L2)	1 5/16”-12 UNF	G 1”-11	PT 1”-11	M33*P2.0
L3	1 1/16”-12 UNF	G 3/4”-14	PT 3/4”-14	M27*P2.0
Gauge port	7/16”-20 UNF	G 1/4”-19	PT 1/4”-19	M12*P1.5

threads code: 3 & 7 are not standard, not it stock, specially fabricate.
Adoper is required in thread NO.:2.3.7 (Drain port)

Dimension

YEOSHE

PV125 ~ PV180, PV210 (Body 4)

Metric version (motor mounting Ø160)

Shaft type

Mounting code: M

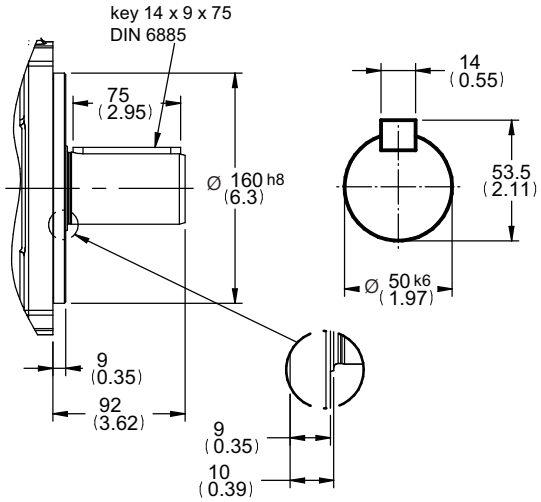

Mounting code: R

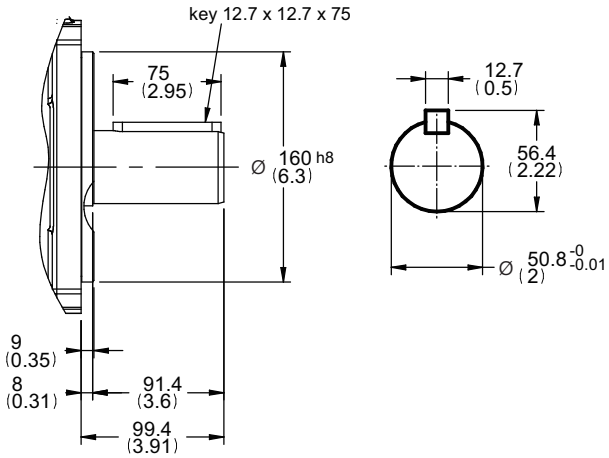

Mounting code: K

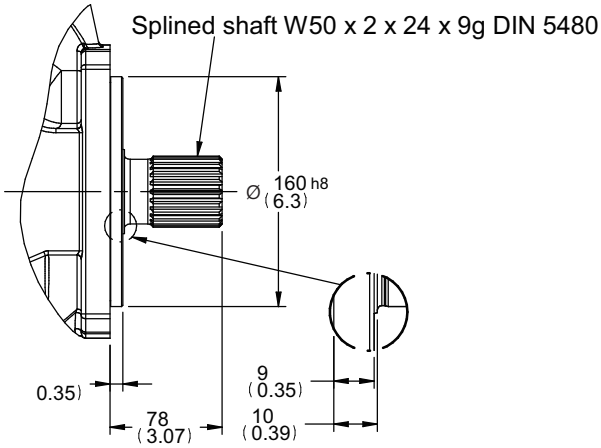

Mounting code: S

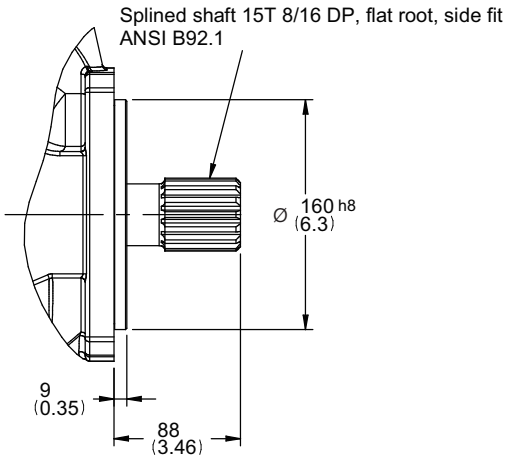

Mounting code: Q

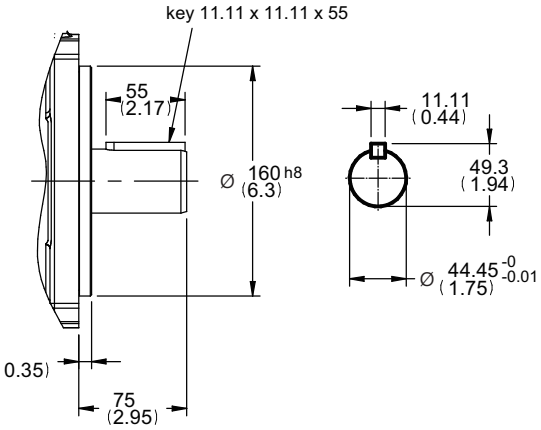

Mounting code: P

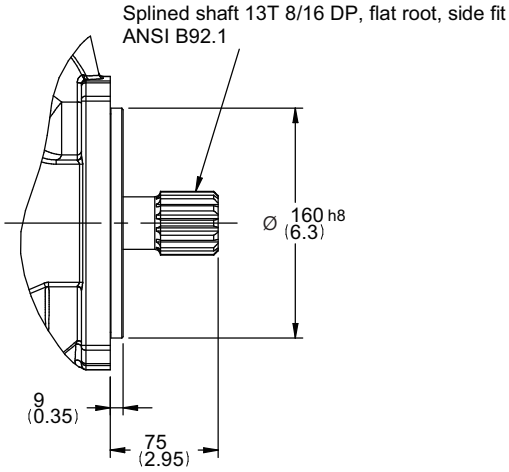

Dimension

PV125 ~ PV180, PV210 (Body 4)

SAE version (motor mounting Ø152.4)

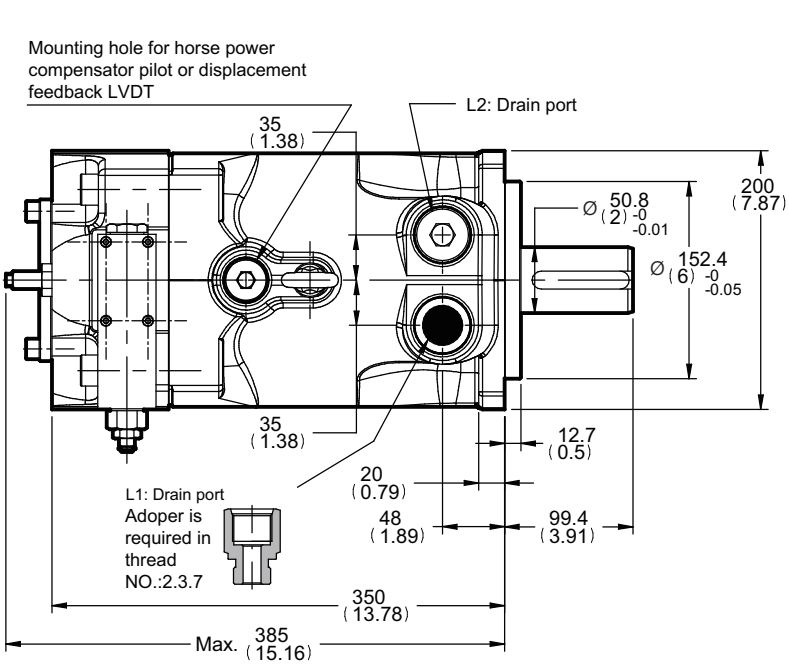

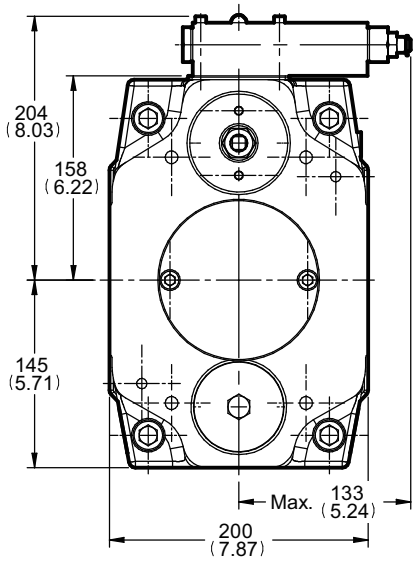

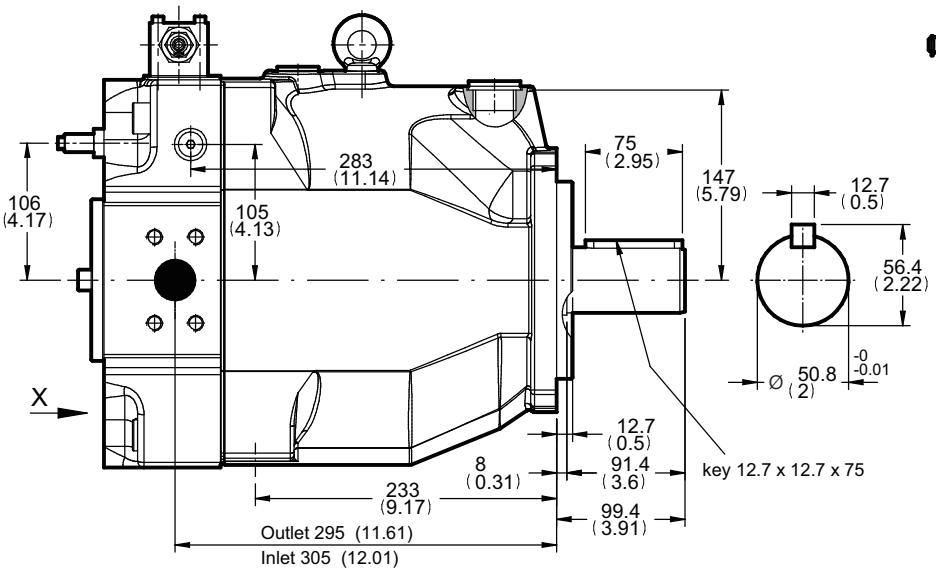

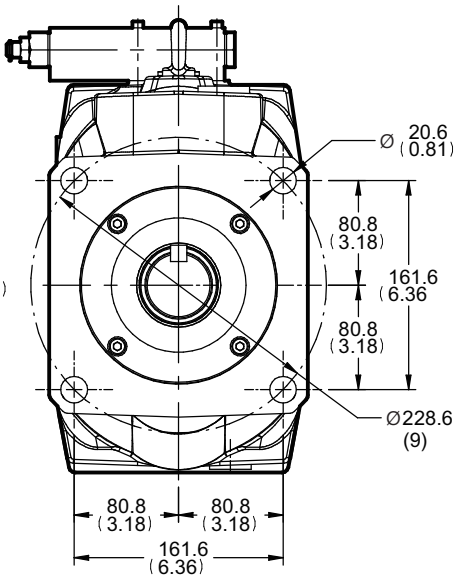

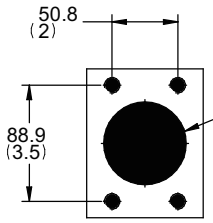

Inlet :
flange according to ISO 6162
DN 64 ; PN 160 bar

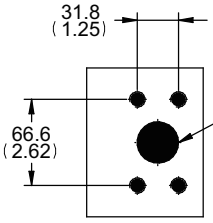

Outlet :
flange according to ISO 6162
DN 32 ; PN 400 bar

Ports

Thread	1 BSPP(G)	2 PT(RC)	3 UNF(SAE)	7 ISO 6149(M)
Inlet	Ø64 M12*P1.75 20 deep	Ø64 M12*P1.75 20 deep	Ø64 1/2"-13 UNC 20 deep	Ø64 M12*P1.75 20 deep
Outlet	Ø32 M12*P1.75 20 deep	Ø32 M12*P1.75 20 deep	Ø32 1/2"-13 UNC 20 deep	Ø32 M12*P1.75 20 deep
Drain port (L1/ L2)	G 1"-11	PT 1"-11	1 5/16"-12 UNF	M33*P2.0
L3	G 3/4"-14	PT 3/4"-14	1 1/16"-12 UNF	M27*P2.0
Gauge port	G 1/4"-19	PT 1/4"-19	7/16"-20 UNF	M12*P1.5

threads code: 3 & 7 are not standard, not it stock, specially fabricate.
Adoper is required in thread NO.:2.3.7 (Drain port)

Dimension

YEOSHE

PV125 ~ PV180, PV210 (Body 4)

SAE version(motor mounting Ø152.4)

Shaft type

Mounting code: N

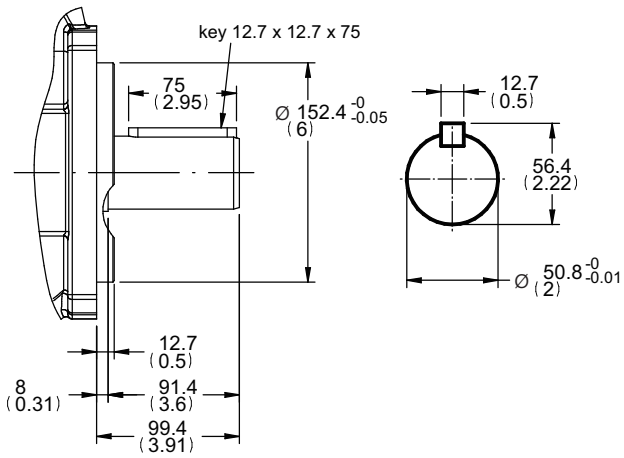

Mounting code: J

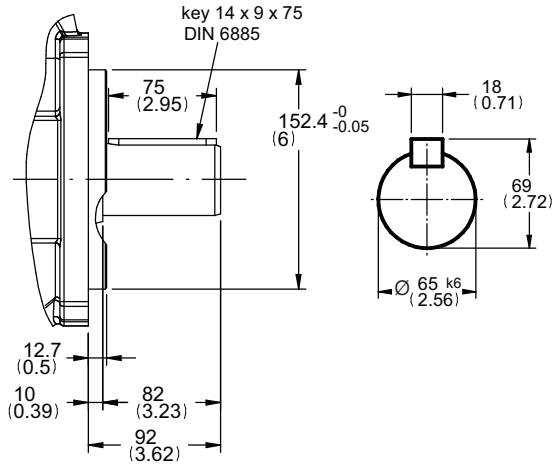

Mounting code: D

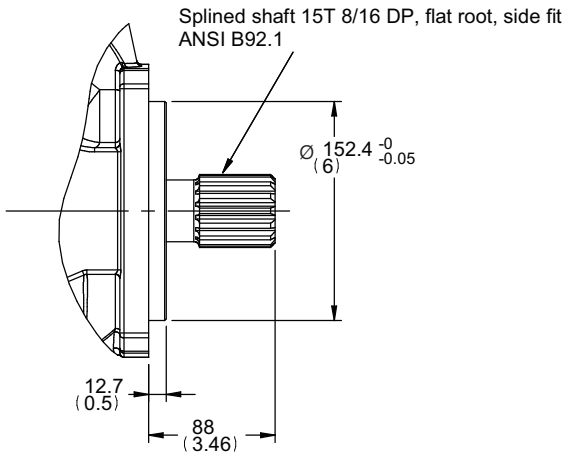

Mounting code: U

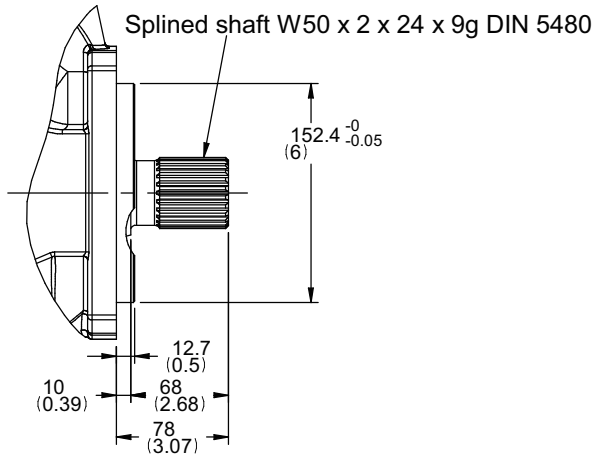

Mounting code: G

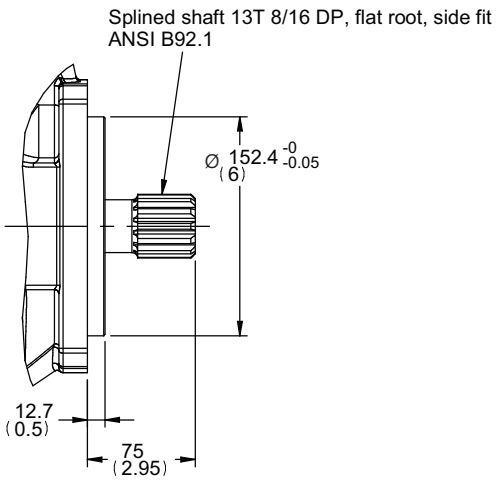

Mounting code: F

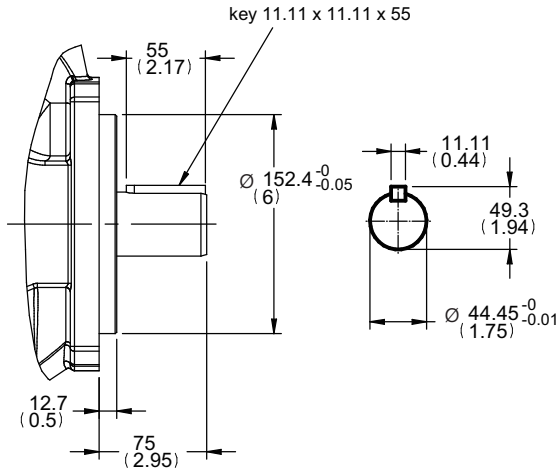

Dimension

PV125 ~ PV180, PV210 (Body 4)

Thru drive

Thru drive:
D, E, F, G, J, K, L, M

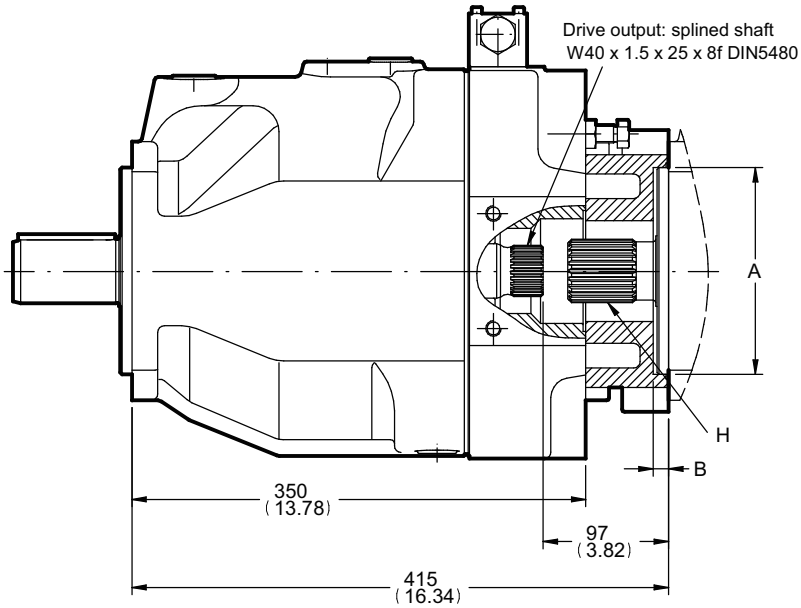

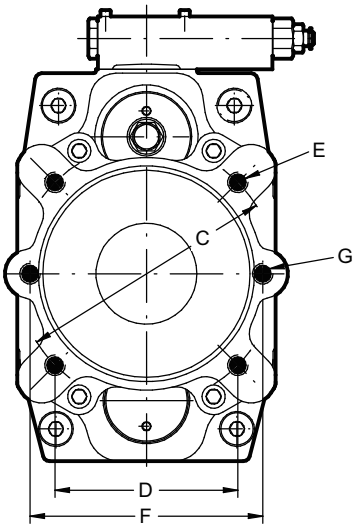

Thru shaft adaptors are available with the following dimensions:							
thru code	A	B	C	D	E	F	G
J	80	10	103	-	M8	109	M10
K	100	12	125	-	M10	140	M12
L	125	12	160	-	M12	180	M16
M	160	12	200	-	M16	n. avail.	n. avail.
D	82.55	10	-	-	-	106	M10
E	101.6	12	-	89.8	M10	146	M12
F	127	14	-	114.5	M12	181	M16
G	152.4	14	-	161.6	M16	n. avail.	n. avail.

Thread codes are 3 and 7
the dimensions E and G are
UNC-2B threads

threads code: 3 and 7 Not standard, not in stock require special requests.

Dimension

YEOSHE

PV125 ~ PV180, PV210 (Body 4) Inlet / Outlet Flange

Inlet Flange

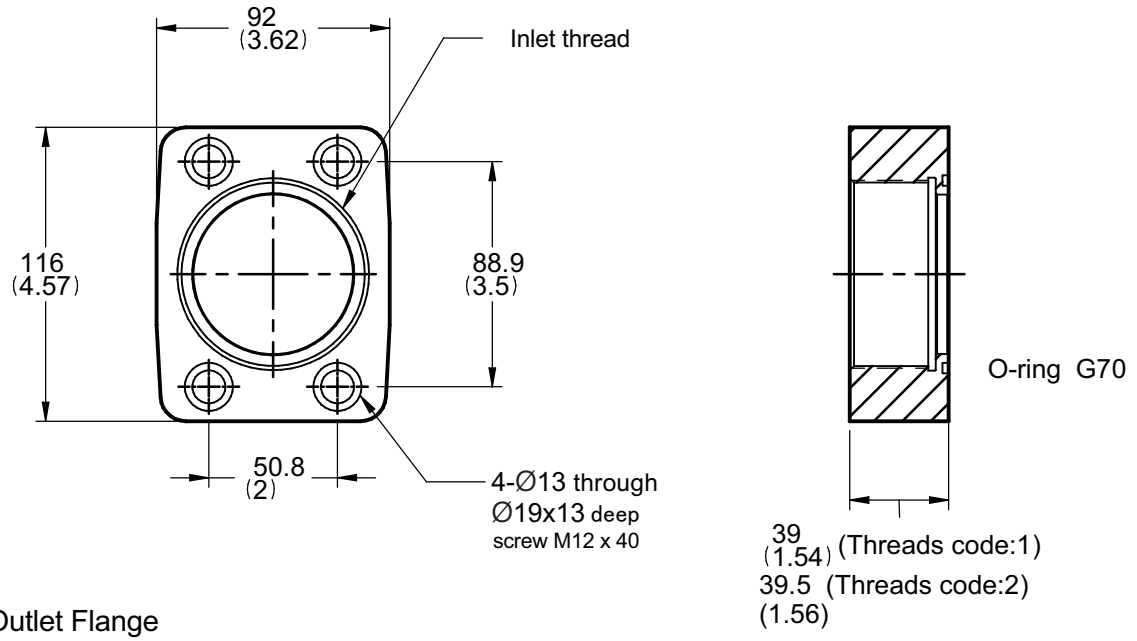

Outlet Flange

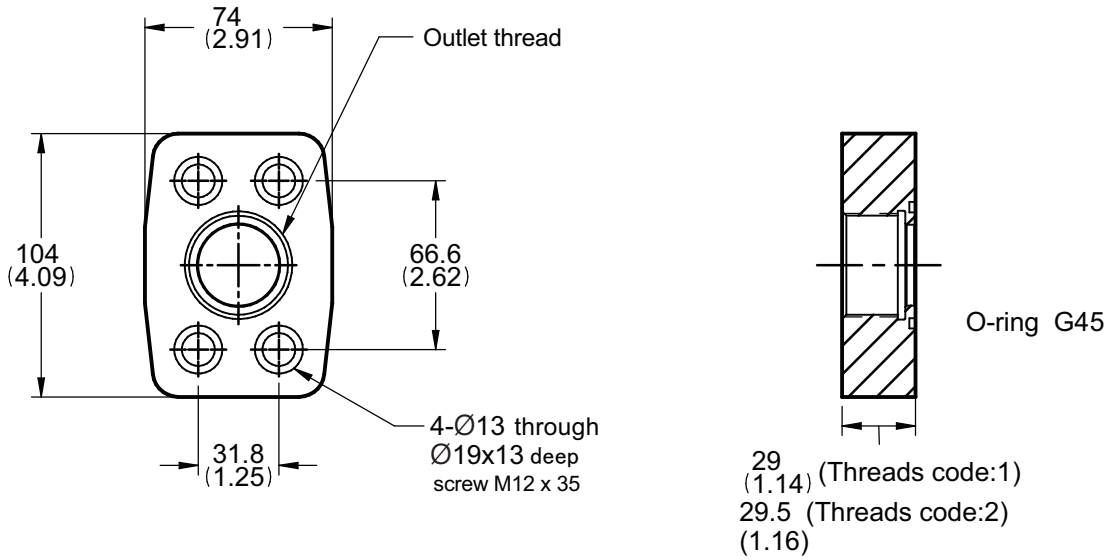

Ports

Thread code	3 UNF(SAE)	1 BSPP(G)	2 PT(RC)	7 ISO 6149(M)
Inlet	Welding	G 2 1/2”-11	PT 2 1/2”-11	Welding
Outlet	1 5/8”-12 UN	G 1 1/4”-11	PT 1 1/4”-11	M42*P2.0

threads code: 3 & 7 are not standard, not it stock, specially fabricate.

Efficiency and case drain flows

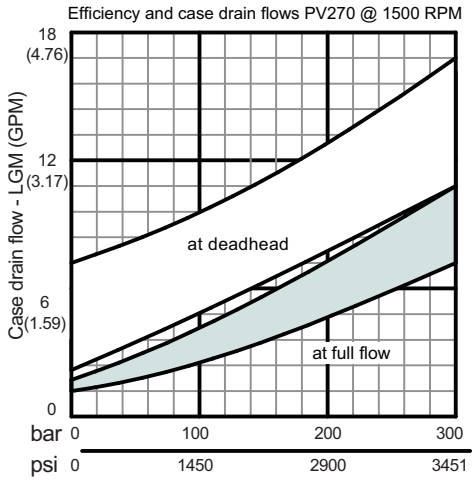

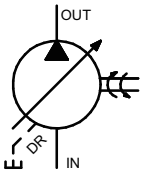

PV270 (Body 5)

The efficiency and power graphs are measured at an input speed of n = 1500 RPM, a temperature of 40°C and a fluid viscosity of 46 mm2/s.
Case drain flow and compensator control flow leave via the drain port of the pump.
To the values shown are to be added 1 to 1.2 l/min , if at pilot operated compensators (codes G*, H*, P*, horse power compensator and p/Q(control) the control flow of the pressure pilot valve also goes through the pump.

Please note: The values shown below are only valid for static operation.
Under dynamic conditions and at rapid compensation of the pump the volume displaced by the servo piston also leaves the case drain port.
This dynamic control flow can reach up to 120 l/min!
Therefore the case drain line is to lead to the reservoir at full size and without restrictions as short and direct as possible.

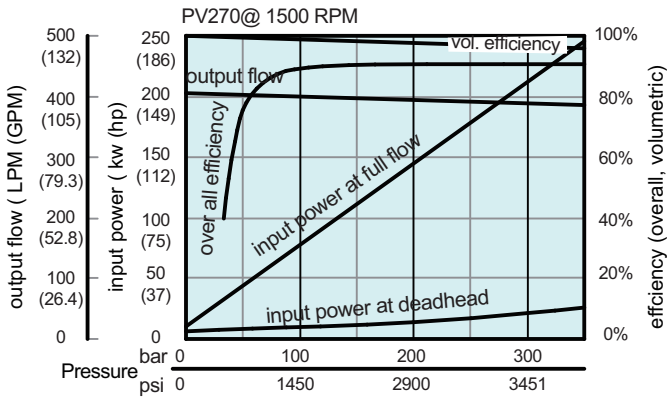

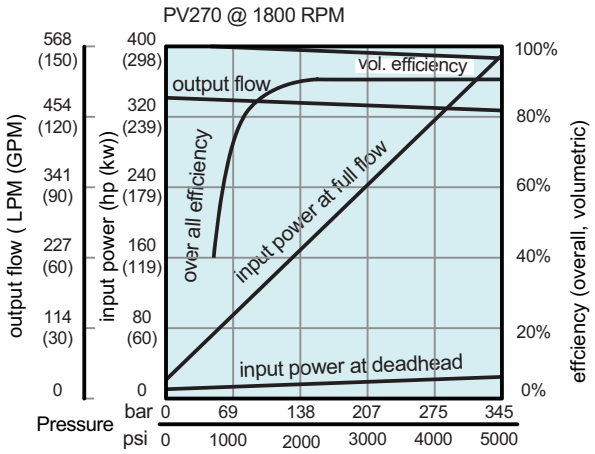

Dimension

YEOSHE

PV270 (Body5)

Metric version (motor mounting Ø200)

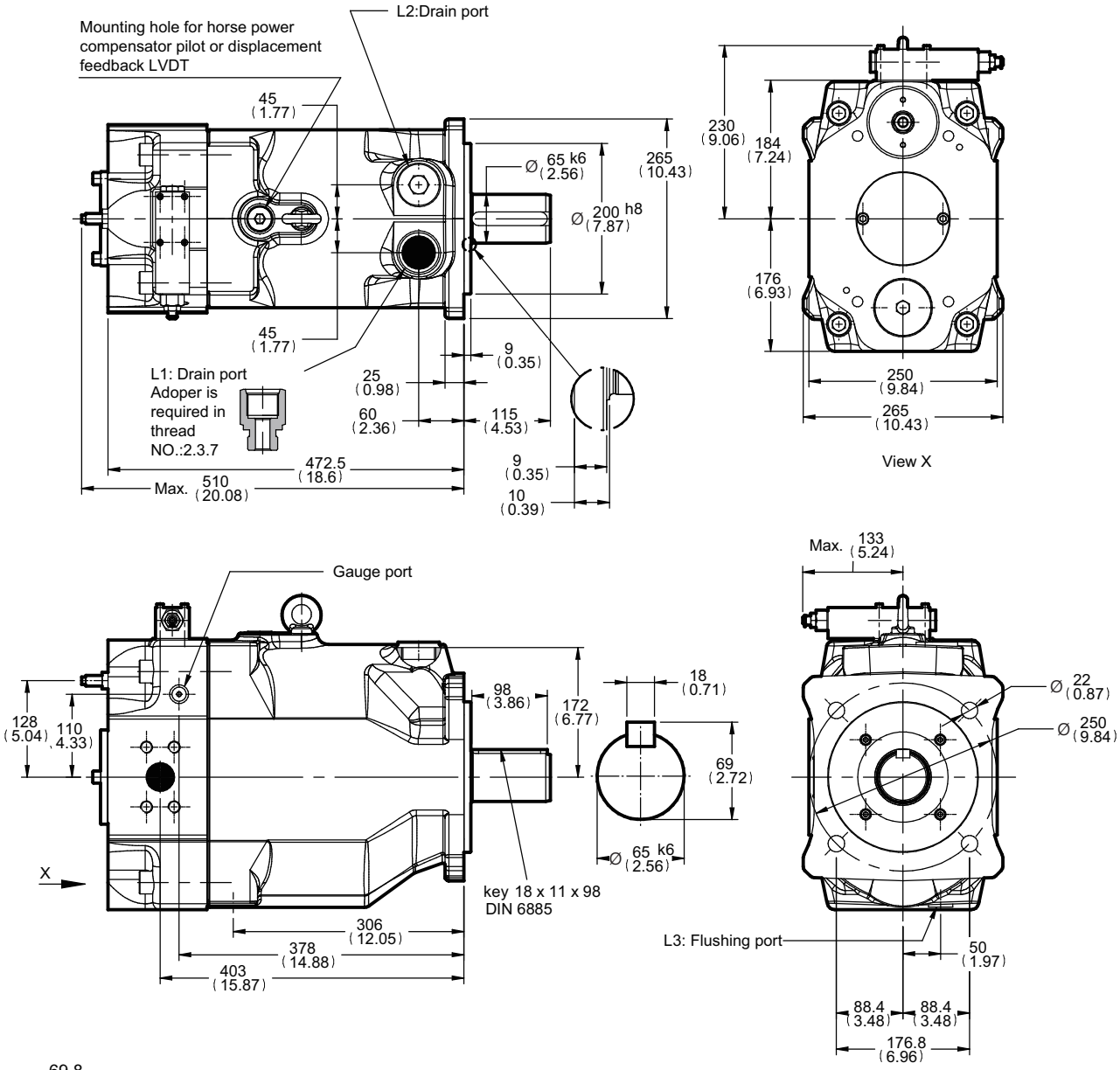

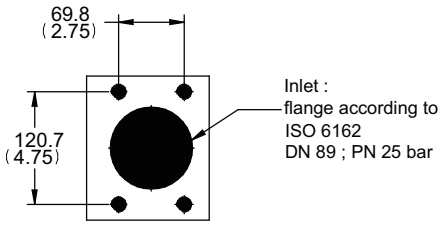

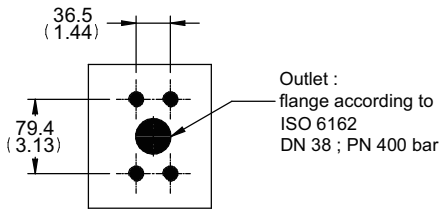

Ports

Thread	3 UNF(SAE)	1 BSPP(G)	2 PT(RC)	7 ISO 6149(M)
Inlet	Ø88 5/8"-11 UNC 32 deep	Ø88 M16*P2.0 32 deep	Ø88 M16*P2.0 32 deep	Ø88 M16*P2.0 32 deep
Outlet	Ø38 5/8"-11 UNC 32 deep	Ø38 M16*P2.0 32 deep	Ø38 M16*P2.0 32 deep	Ø38 M16*P2.0 32 deep
Drain port (L1/ L2)	1 5/8"-12 UNF	G 1 1/4"-11	PT 1 1/4"-11	M42*P2.0
L3	1 1/16"-12 UNF	G 3/4"-14	PT 3/4"-14	M27*P2.0
Gauge port	7/16"-20 UNF	G 1/4"-19	PT 1/4"-19	M12*P1.5

threads code: 3 & 7 are not standard, not it stock, specially fabricate.
Adoper is required in thread NO.:2.3.7 (Drain port)

Dimension

PV270 (Body 5)

Metric version (motor mounting Ø200)

Shaft type

Mounting code: M

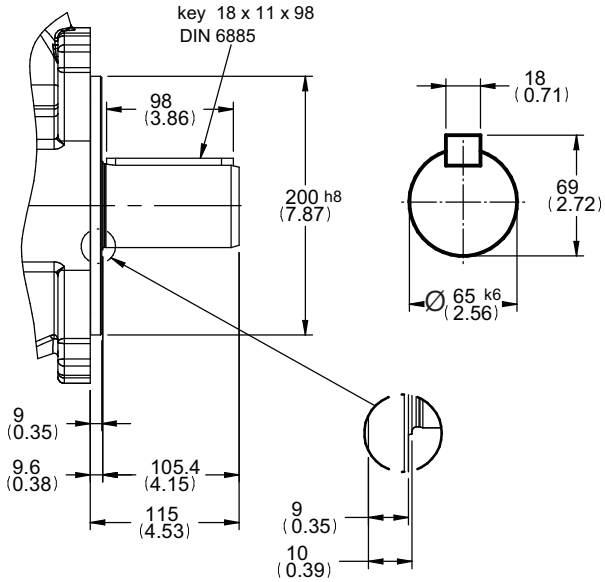

Mounting code: R

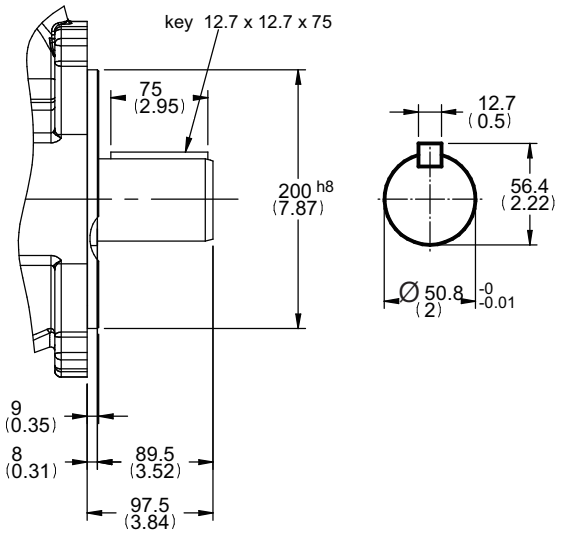

Mounting code: K

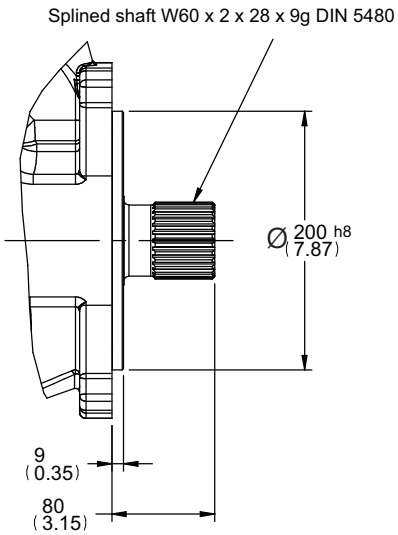

Mounting code: S

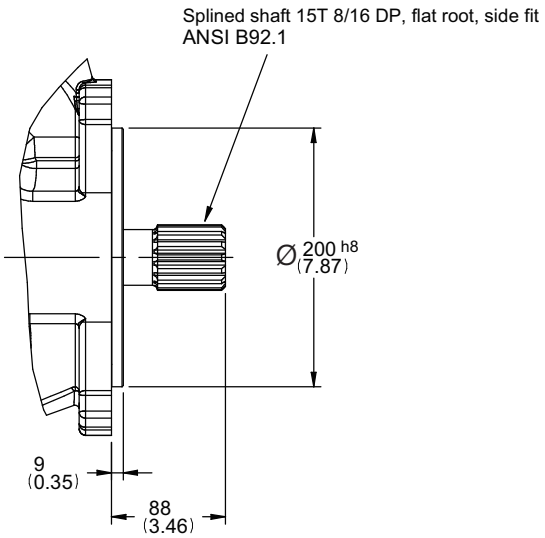

Dimension

YEOSHE

PV270 (Body 5) ※Custom Made

Metric version (motor mounting Ø224)

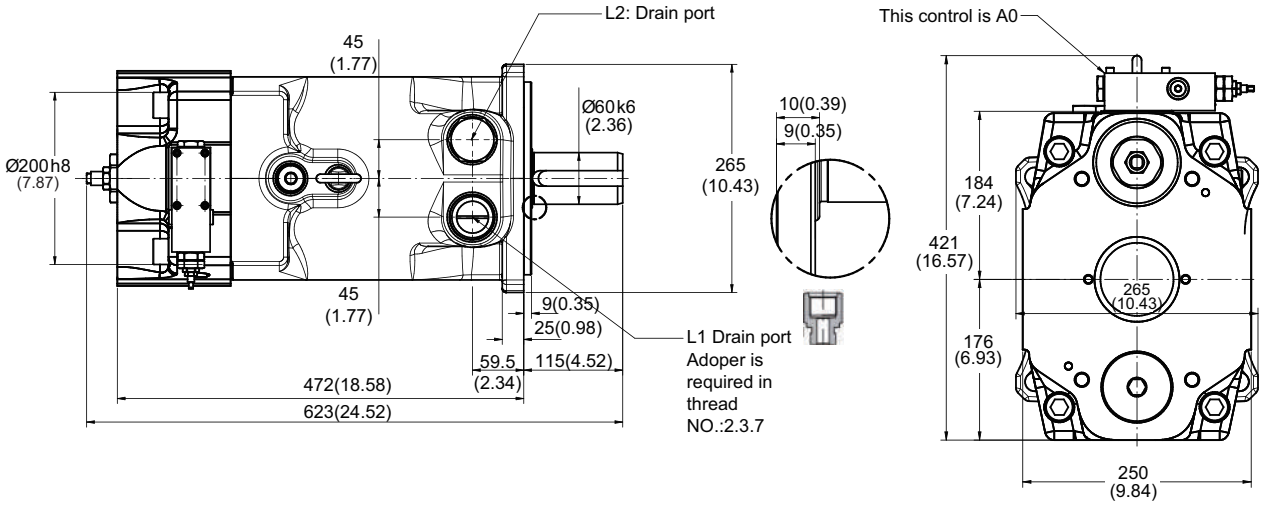

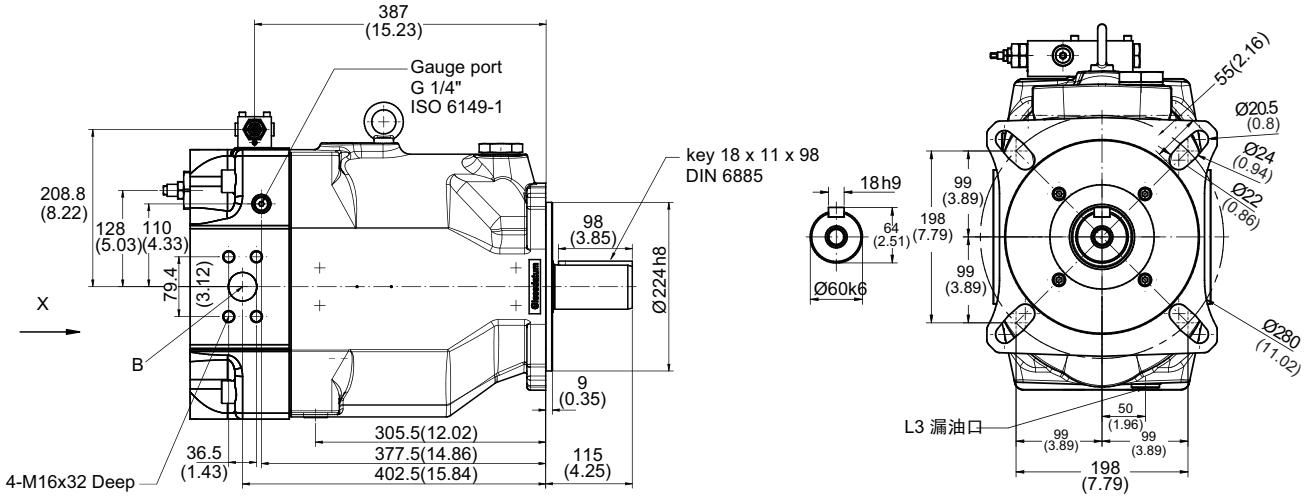

VIEW X

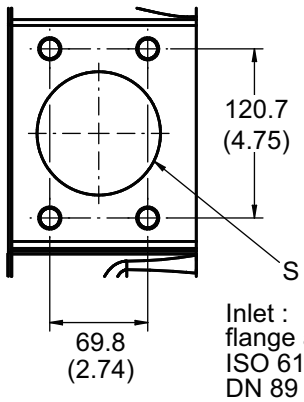

Inlet :
flange according to
ISO 6162
DN 89 ; PN 25 bar

Ports

Thread	1 BSPP(G)	2 PT(RC)	3 UNF(SAE)	7 ISO 6149(M)
Inlet	Ø38 M16*P2.0 32 deep	Ø38 M16*P2.0 32 deep	Ø38 5/8"-11 UNC 32 deep	Ø38 M16*P2.0 32 deep
Outlet	Ø88 M16*P2.0 32 deep	Ø88 M16*P2.0 32 deep	Ø88 5/8"-11 UNC 32 deep	Ø88 M16*P2.0 32 deep
Drain port (L1/ L2)	G 1 1/4"-11	PT 1 1/4"-11	1 5/8"-12 UNF	M42*P2.0
L3	G 1/2"-14	G 1/2"-14	G 1/2"-14	G 1/2"-14
Gauge port	G 1/4"-19	G 1/4"-19	G 1/4"-19	G 1/4"-19

threads code: 3 & 7 are not standard, not it stock, specially fabricate.
Adoper is required in thread NO.:2.3.7 (Drain port)

This pump is clockwise (R), counter clockwise (L).
B, S oil inlet port and outlet port can be interchangeable.

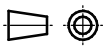

Dimension

PV270 (Body 5) ※Custom Made

Metric version (motor mounting Ø224)

Shaft type

Mounting code: A

(Replacement for A4VSO250)

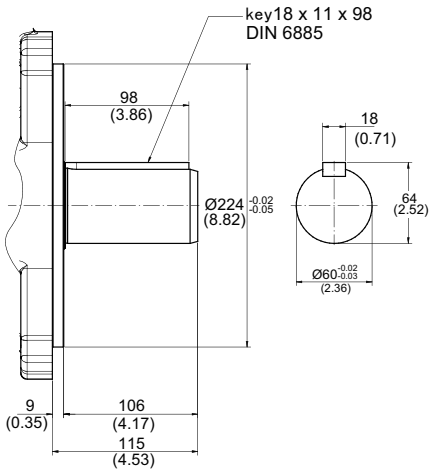

Mounting code: B

(Replacement for A4VSO355)

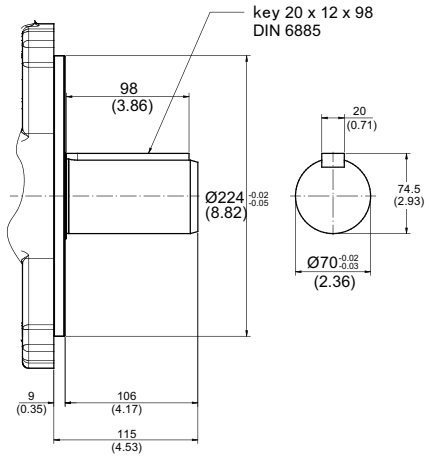

Dimension

YEOSHE

PV270 (Body 5)

SAE version (motor mounting Ø165.1)

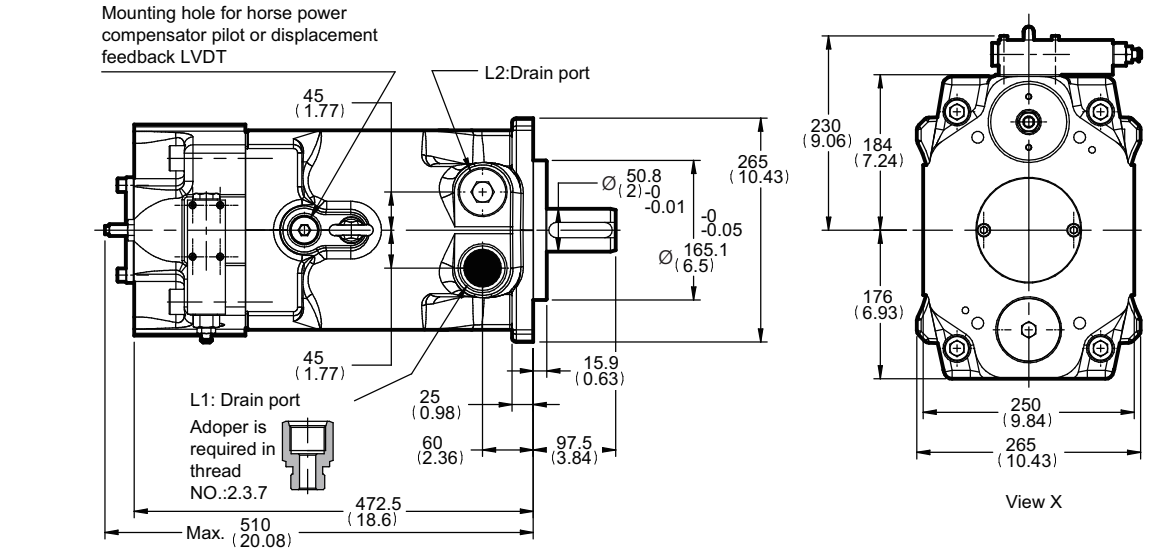

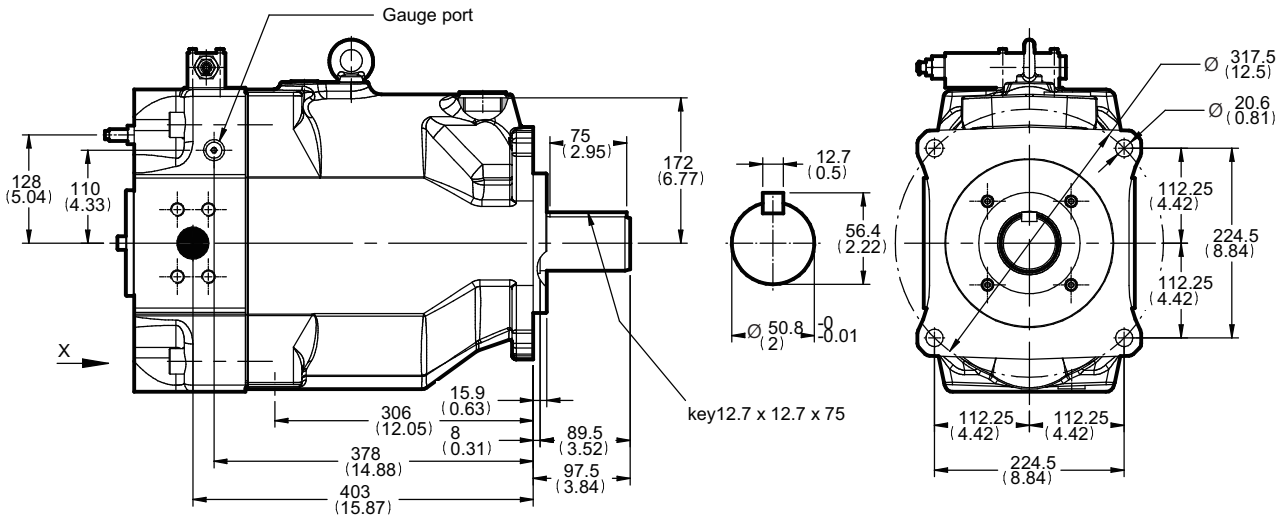

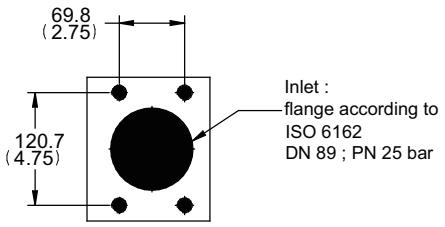

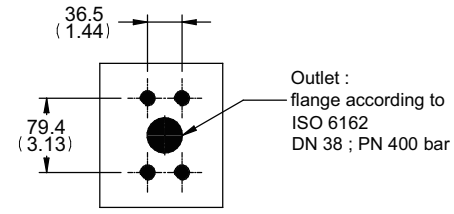

Ports

Thread	3 UNF(SAE)	1 BSPP(G)	2 PT(RC)	7 ISO 6149(M)
Inlet	Ø88 5/8”-11 UNC	Ø88 M16*P2.0	Ø88 M16*P2.0	Ø88 M16*P2.0
Outlet	32 deep Ø38 5/8”-11 UNC 32 deep	32 deep Ø38 M16*P2.0 32 deep	32 deep Ø38 M16*P2.0 32 deep	32 deep Ø38 M16*P2.0 32 deep
Drain port (L1/ L2)	1 5/8”-12 UNF	G 1 1/4”-11	PT 1 1/4”-11	M42*P2.0
L3	1 1/16”-12 UNF	G 3/4”-14	PT 3/4”-14	M27*P2.0
Gauge port	7/16”-20 UNF	G 1/4”-19	PT 1/4”-19	M12*P1.5

Threads code: 3 & 7 are not standard, not it stock, specially fabricate.
Adoper is required in thread NO.:2.3.7 (Drain port)

Dimension

PV270 (Body 5)

SAE version(motor mounting Ø165.1)

Shafe type

Mounting code: N

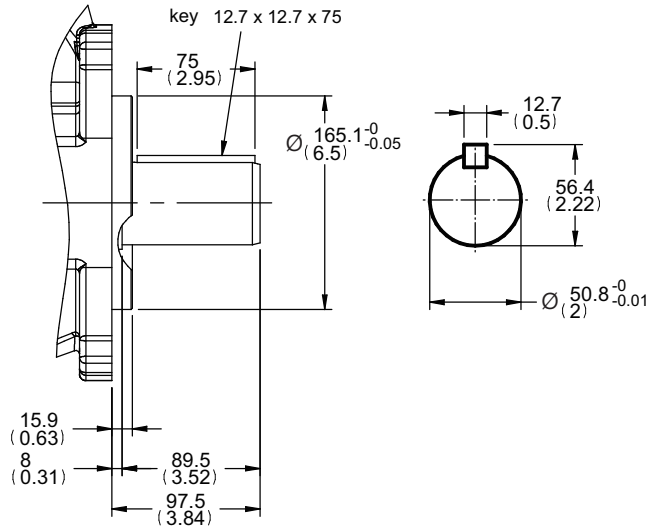

Mounting code: J

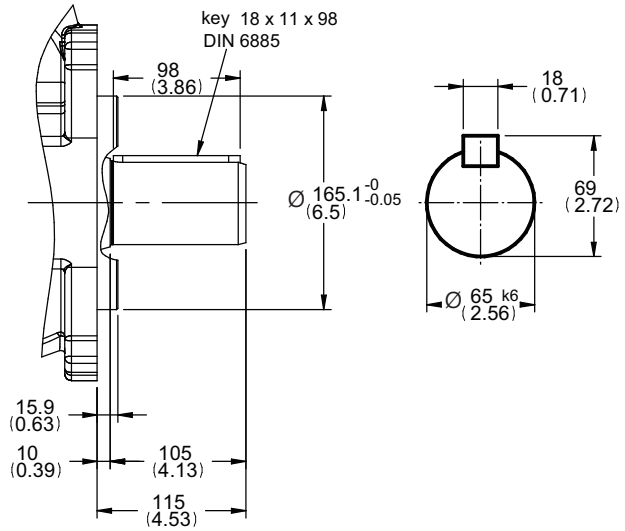

Mounting code: D

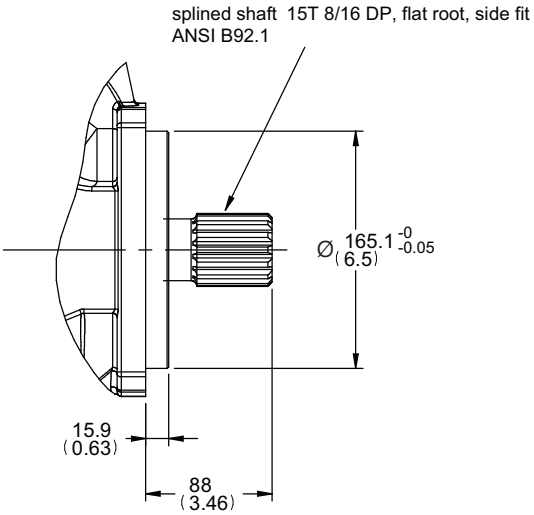

Mounting code: U

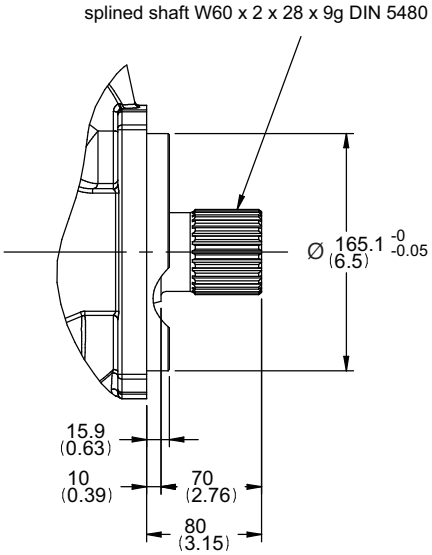

Dimension

YEOSHE

PV270 (Body 5)

Thru drive

thru drive:
D, E, F, G, H, J, K, L, M, N

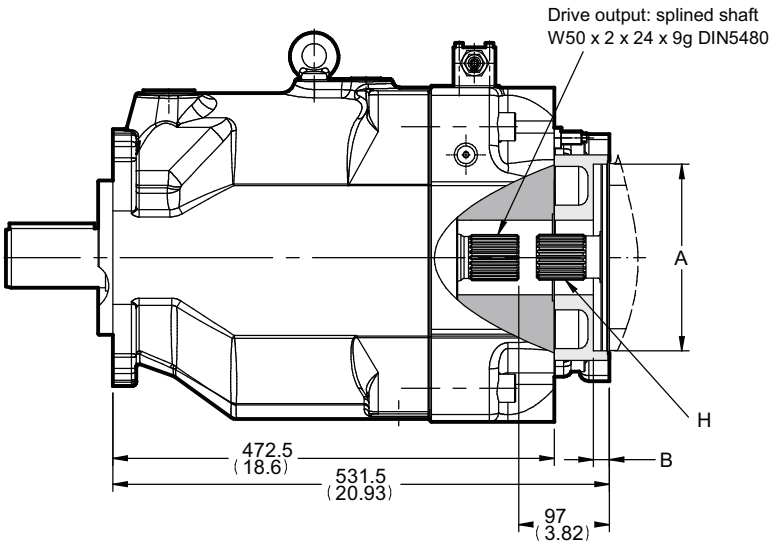

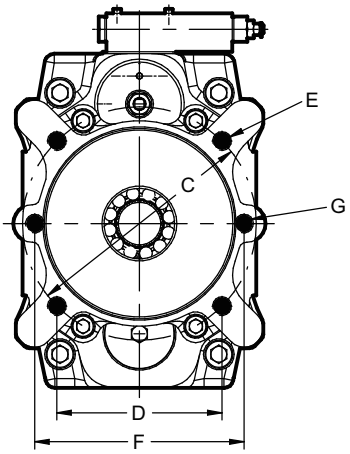

Thru shaft adaptors are available with the following dimensions:							
thru code	A	B	C	D	E	F	G
J	80	8.5	103	-	M8	109	M10
K	100	10.5	125	-	M10	140	M12
L	125	10.5	160	-	M12	180	M16
M	160	13.5	200	-	M16	224	M20
N	200	13.5	250	-	M20	n. avail.	n. avail.
D	82.55	8	-	-	-	106	M10
E	101.6	11	-	89.8	M10	146	M12
F	127	13.5	-	114.5	M12	181	M16
G	152.4	13.5	-	161.6	M16	229	M20
H	165.1	17	-	224.5	M20	n. avail.	n. avail.

Thread codes are 3 and 7 the dimensions E and G are UNC-2B threads

threads code: 3 and 7 Not standard, not in stock require special requests.

Dimension

PV270 (Body 5) Inlet / outlet Flange

Thru drive

Inlet Flange

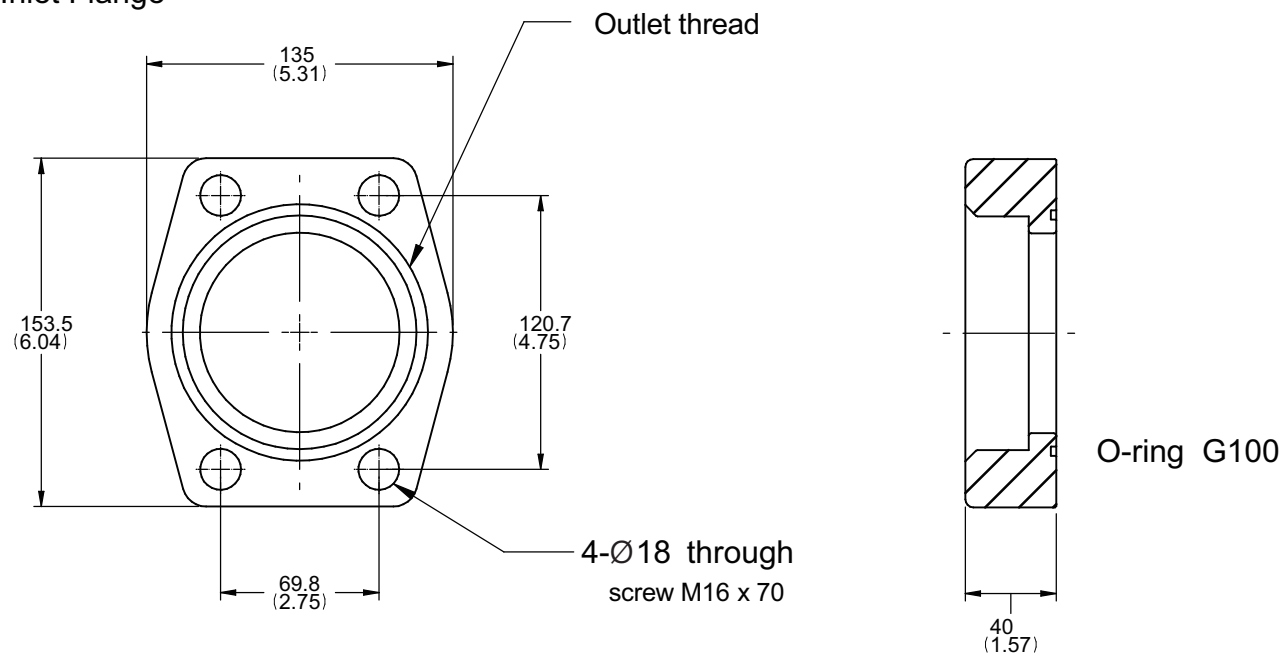

Outlet Flange

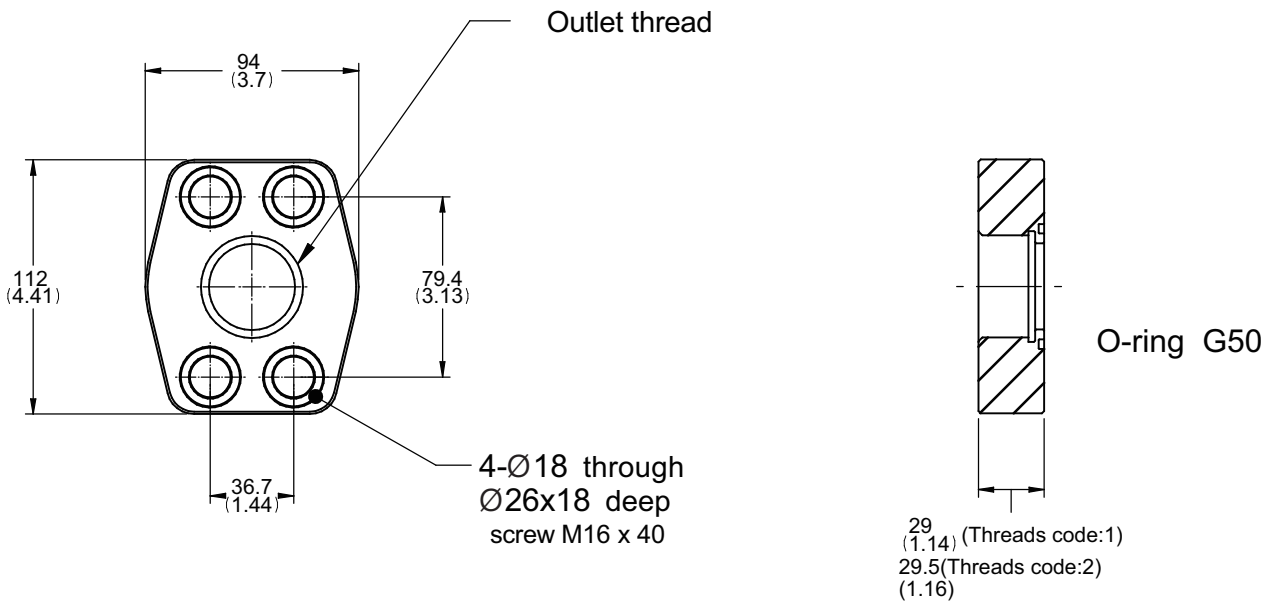

Ports

Thread code	3 UNF(SAE)	1 BSPP(G)	2 PT(RC)	7 ISO 6149(M)
Inlet	welding 3 1/2”			
Outlet	1 7/8”-12 UN	G 1 1/2”-11	PT 1 1/2”-11	M48*P2.0

Threads code: 3 & 7 are not standard, not it stock, specially fabricate.

Pump combination

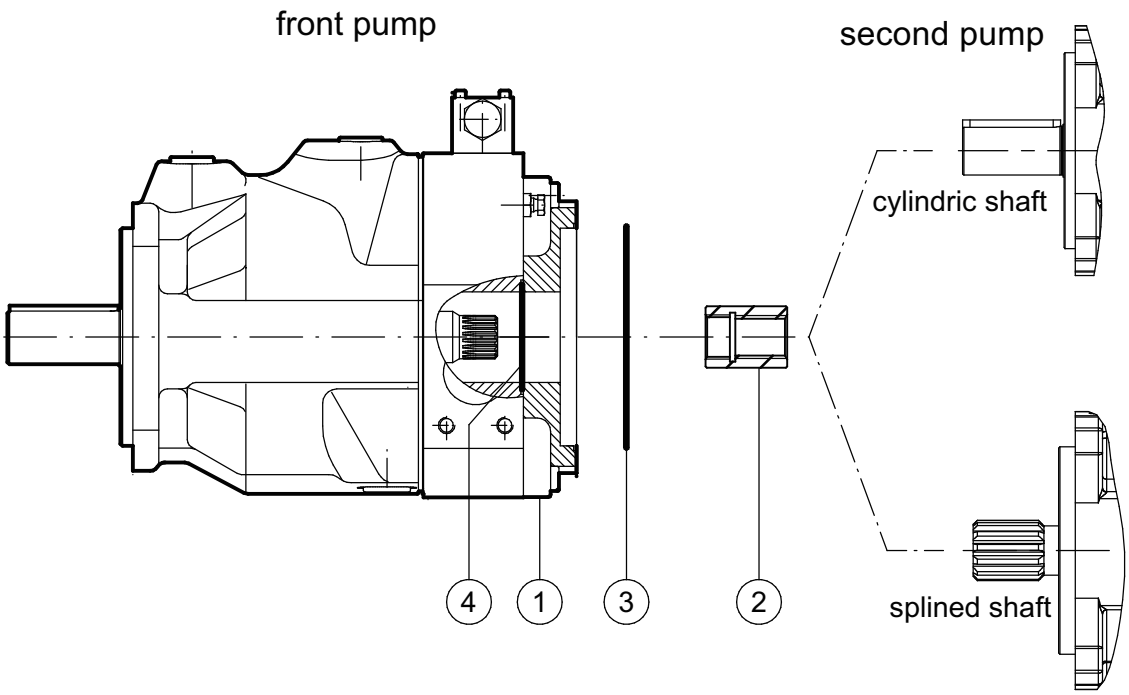

NO.	Name
1	adapter
2	coupling
3	front pump o-ring
4	second pump o-ring

Order code refers to next page

Pump combination

② coupling order no.

second pump		fornt pump Size				
second pump shaft	model	Body 1 (PV016~023, 028)	Body 2 (PV032~046, 056,065)	Body 3 (PV063~092, 110)	Body 4 (PV125~180, 210)	Body 5 (PV270)
SAE splined shaft						
9T 16/32 DP		4A505032	4A505037	4A505051	4A505058	4A505069
11T 16/32 DP		--	--	--	--	--
13T 16/32 DP		4A505033	4A505034	4A505047	4A505059	4A505070
15T 16/32 DP	(PV016~023,PV028) (PV032~046,056,065)	--	4A505040	4A505120	4A505060	4A505071
14T 12/24DP	(PV032~046,056,065)	--	4A505036	4A505052	4A505061	4A505072
17T 12/24DP		--	--	--	--	--
13T 8/16 DP	(PV063~092,110) (PV125~180,210)	--	--	--	4A505062	4A505073
15T 8/16 DP	(PV125~180,210) (PV270)	--	--	--	4A505063	4A505074
splined shaft DIN 5480						
15T W25x1.5x15	(PV016~023,PV028)	4A505031	4A505038	4A505049	4A505057	4A505068
20T W32x1.5x20	(PV032~046,056,065)	--	4A505039	4A505048	4A505056	4A505067
25T W40x1.5x25	(PV063~092,110)	--	--	4A505050	4A505055	4A505066
24T W50x2.0x24	(PV125~180,210)	--	--	--	4A505054	4A505065
28T W60x2.0x28	(PV270)	--	--	--	--	4A505075
cylindric shaft						
ø19.05*4.76		--	--	--	--	--
ø22.22*4.76		--	4A505042	4A505043	4A505053	4A505064
ø22.22*6.35		--	4A505042	4A505043	4A505053	4A505064
ø25.4*6.35	(PV016~023,PV028)	--	4A505041	--	--	--
ø31.75*7.94	(PV032~046,056,065)	--	--	--	--	--
ø44.45*11.11	(PV063~092,110) (PV125~180,210)	--	--	--	--	--
ø50.8*12.7	(PV125~180,210) (PV270)	--	--	--	--	--
cylindric shaft						
ø25*8	(PV016~023,028)	--	4A505035	--	--	--
ø32*10	(PV032~046,056,065)	--	--	--	--	--
ø40*12	(PV063~092,110)	--	--	--	--	--
ø50*14	(PV125~180,210)	--	--	--	--	--
ø65*18	(PV270)	--	--	--	--	--

Pump combination

YEOSHE

order no.

Fornt pump	Thru drive code		① Adapter	③ Fornt pump o-ring	④ Second pump o-ring
Body 1 (PV016~023,028)	I	φ 63	4A504012	3AAA1BA134	3AAC1AA065
	J	φ 80	4A504013	3AAA1BA134	3AAC1AA085
	K	φ 100	4A504014	3AAA1BA134	3AAC1AA105
	C	φ 50.8	4A504015	3AAA1BA134	3AAC1AA055
	D	φ 82.55	4A504016	3AAA1BA134	3AAC1AA085
	E	φ 101.6	4A504017	3AAA1BA134	3AAC1AA105
Body 2 (PV032~046,056,065)	I	φ 63 (261L)	--	3AAA1BA146	--
	J	φ 80 (261L)	--	3AAA1BA146	3AAD1AA080
	K	φ 100 (261L)	4A504023	3AAA1BA146	3AAD1AA100
	L	φ 125 (261L)	4A504024	3AAA1BA146	3AAD1AA125
	D	φ 82.55 (261L)	4A504020	3AAA1BA146	3AAD1AA085
	E	φ 101.6 (261L)	4A504021	3AAA1BA146	3AAD1AA100
	S	φ 101.6 (276L)	4A504018	3AAA1BA146	3AAD1AA100
	F	φ 127 (276L)	4A504019	3AAA1BA146	3AAD1AA130
Body 3 (PV063~092,110)	I	φ 63	--	3AAA1BA146	--
	J	φ 80	4A504030	3AAA1BA146	3AAD1AA080
	K	φ 100	4A504031	3AAA1BA146	3AAD1AA100
	L	φ 125	4A504032	3AAA1BA146	3AAD1AA125
	M	φ 160	4A504033	3AAA1BA146	3AAF1AA316
	D	φ 82.55	4A504025	3AAA1BA146	3AAD1AA085
	E	φ 101.6	4A504026	3AAA1BA146	3AAD1AA100
	F	φ 127	4A504027	3AAA1BA146	3AAD1AA130
	G	φ 152.4	4A504028	3AAA1BA146	3AAA1AA163
Body 4 (PV125~180,210)	J	φ 80	4A504039	3AAA1BA153	3AAD1AA080
	K	φ 100	4A504040	3AAA1BA153	3AAD1AA100
	L	φ 125	4A504041	3AAA1BA153	3AAD1AA125
	M	φ 160	4A504042	3AAA1BA153	3AAF1AA316
	D	φ 82.55	4A504035	3AAA1BA153	3AAD1AA085
	E	φ 101.6	4A504036	3AAA1BA153	3AAD1AA100
	F	φ 127	4A504037	3AAA1BA153	3AAD1AA130
	G	φ 152.4	4A504038	3AAA1BA153	3AAA1AA163
Body 5 (PV270)	J	φ 80	4A504049	3AAA1BA153	3AAD1AA080
	K	φ 100	4A504050	3AAA1BA153	3AAD1AA100
	L	φ 125	4A504051	3AAA1BA153	3AAD1AA125
	M	φ 160	4A504052	3AAA1BA153	3AAF1AA316
	N	φ 200	4A504053	3AAA1BA153	3AAF1AA320
	D	φ 82.55	4A504044	3AAA1BA153	3AAD1AA085

Dimensions

Double pump dimensions

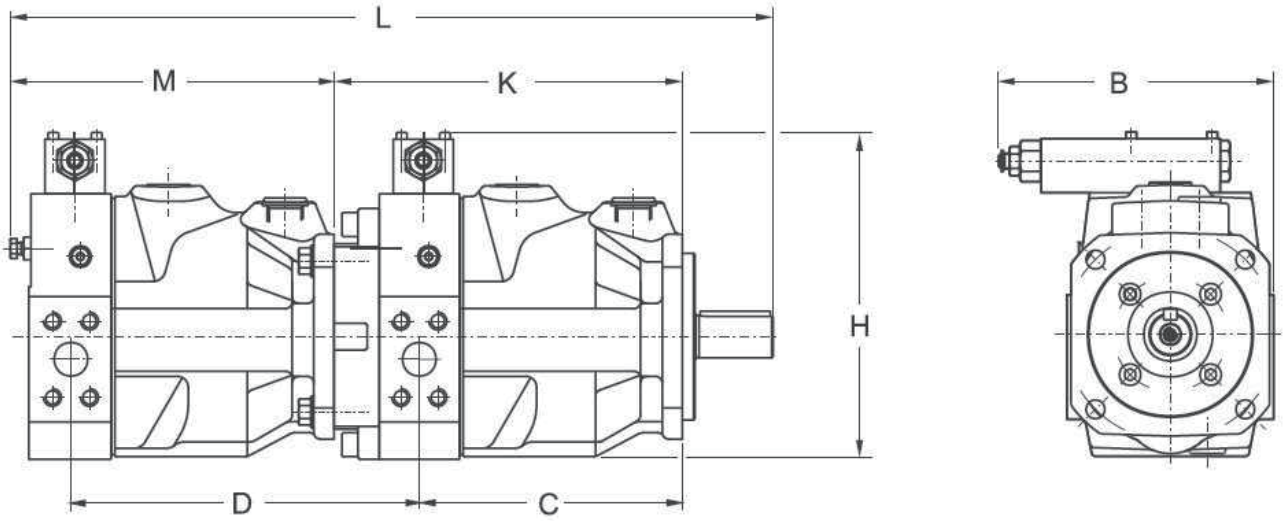

Main pump	Second pump	Interface main pump	L	B	C	D	H	K	M
PV016,020,023,028	PV016,020,023,028	100 B4 HW	489	196	170.5	225	220	225	212
PV032,040,046, 056,065	PV016,020,023,028	125 B4 HW	541	208	197	235.5	245	261	212
	PV032,040,046,056,065		574	208	197	261	245	261	245
PV063,071,080,092 110	PV016,020,023,028	160 B4 HW	630	232	252	244.5	299	326	212
	PV032,040,046,056,065		663	232	252	271	299	326	245
	PV063,071,080,092,110		724	232	252	326	299	326	306
PV125,140,180,210	PV016,020,023,028	160 B4 HW	719	230	305	208.5	349	415	212
	PV032,040,046,056,065		752	230	305	307	349	415	245
	PV063,071,080,092,110		813	230	305	362	349	415	306
	PV125,140,180,210		878	230	305	415	349	415	385
PV270	PV016,020,023,028	200 B4 HW	860	255	403	299	406	531.5	212
	PV032,040,046,056,065		893	255	403	325.5	406	531.5	245
	PV063,071,080,092,110		954	255	403	380.5	406	531.5	306
	PV125,140,180,210		1033	255	403	433.5	406	531.5	385
	PV270		1134	255	403	531.5	406	531.5	510

PV Axial Piston Pump

YEOSHE

Thru drive, shaft load limitations

The max. Transferable torque in Nm for the different shafts options are:

Shaft code	PV016-023 PV028	PV032-046 PV056,065	PV063-092 PV110	PV125-PV180 PV210	PV270
N	300	550	1320	2000	2000
D	300	610	1218	2680	2680
F	-	-	-	1320	-
G	-	-	-	1640	-
M	300	570	1150	1900	2850
K	405	675	1400	2650	3980

Important notice

The max. allowable torque of the individual shaft must not be exceeded.
For 2-pump combinations, there is no problem because PV series offers 100%thru torque.
For 3-pump combinations (or more), the limit torque will be reached or exceeded.
Therefore, it is necessary to calculate the torque factor and compare with the allowed torque limit factor in the table.

Requirement: calculated torque factor ＜torque factor

To make the necessary calculations easier and more user friendly it is not required to calculate actual torque requirements in Nm and compare them with the shaft limitations. The table on the right shows limit factors that include material specification, safety factors and conversion factors.

The total torque factor is represented by the sum of the individual torque factors of all pumps in the complete pump combination.

The torque factor of each individual pump is calculated by multiplying the max. operating pressure p of the pump(in bar) with the max.displacement Vg of the pump(in cm^3/ rev).

pump	shaft	torque limit factor
PV016-023 PV028	N	17700
	D	17700
	M	17700
	K	20130
PV032-046 PV056,065	N	32680
	D	36380
	M	33810
	K	40250
PV063-092 PV110	N	77280
	D	72450
	M	67620
	K	83720
PV125-180 PV210	N	118400
	D	158760
	F	78750
	G	97650
	M	113400
	K	157500
PV270	N	119000
	D	159700
	M	170100
	K	236250

Total torque factor of the comination=
sum of individual torque factors of all pumps

Torque factor of any pump= p x Vg (pressure in bar x displacement in cm^3/rev)

PV Axial piston pump exploded view

(E.g.Body 4)

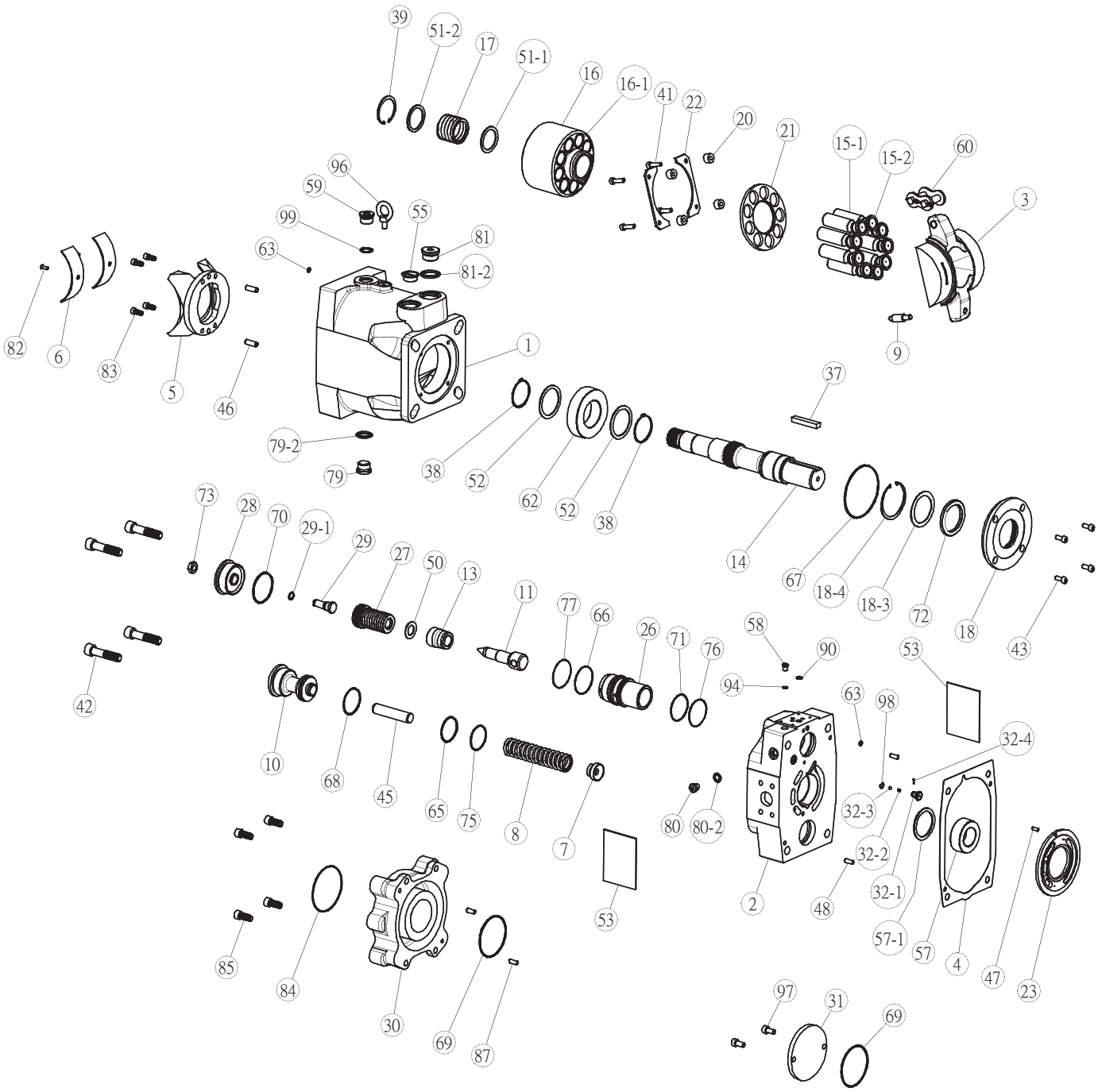

Remark:Body1 without (16-1)
Body1~3 without (18-3)
Body1~3,5 without (57-1)
Body2,3 without (75)

※YEOSHE product specifications are subject to change without prior notice.

PV Axial piston pump exploded view

YEOSHE

NO	Item	NO	Item
1	Pump body	51-1	Washer-cylinder block
2	Pump cover	51-2	Washer-cylinder block
3	Swash plate	52	Washer-shaft
4	Body seal	53	Seal
5	Trunnion carrier	55	Plug
6	Trunnion bearing	57	Needle bearing
7	Guide-servo spring	57-1	Washer
8	Servo spring	58	Plug-comp.interface
9	Locator-servo spring	59	Plug-feedback
10	Plug-servo spring	60	Chain link
11	Connector-swash plate	62	Roller bearing
13	Contour sleeve	63	O-ring
14	Shaft	65	O-ring
15-1	Piston assembly	66	O-ring
15-2	Piston shose	67	O-ring
16	Cylinder block	68	O-ring
16-1	Cylinder block washer	69	O-ring
17	Spring-cylinder block	70	O-ring
18	Pilot cover	71	O-ring
18-3	Pilot cover washer	72	Shaft-seal
18-4	Snap ring	73	Lock nut with seal
20	Distance washer	75	B/U ring
21	Slipper retainer	76	B/U ring
22	Retainer segment	77	B/U ring
23	Valve plate	79	Plug
26	Servo piston sleeve	79-2	Washer
27	Servo piston	80	Plug
28	Servo piston cover	80-2	Washer
29	Spindle	81	Plug
29-1	O-ring	81-2	Washer
30	Adaptor	82	Screw
31	Cover plate	83	Screw
32-1	Air bleed valve	84	O-ring
32-2	Spring	85	Adaptor-screw
32-3	Ball	87	Adaptor-pin
32-4	Pin	90	O-ring
37	Key	94	O-ring
38	Snap ring-shaft	96	Lift eye
39	Snap ring-cyl.block	97	Screw
41	Retainer screw	98	O-ring
42	Screw	99	O-ring
43	Head cap screw		
45	Guide pin-servo		
46	Loc.pin-cradle		
47	Loc.pin-valve plate		
50	Washer-servo piston		

General installation information

A. Fluid recommendations
Premium quality hydraulic mineral oil fluids are recommended, like H-LP oils to DIN 51524, part2.
The viscosity range should be 25 to 50 mm²/s (cSt) at 50º C. Operating temperatures –10 to +70ºC.
For other fluids such as phosphoric acid esters or for other operating conditions, please consult with YEOSHE for assistance.

B. Seals
NBR (Nitrile) seals are used for operation with hydraulic fluids based on mineral oil.
For synthetic fluid, as perhaps phosphoric acid esters, Fluorocarbon seals are required.
Please consult with YEOSHE for assistance.

C. Filtration
For maximum pump and system component functionability and life, the system should be protected from contamination by effective filtration.
Fluid cleanliness should be in accordance with ISO classification ISO 4406.
The quality of filter elements should be in accordance with ISO standards.
(1) Minimum requirement for filtration rate ×(mm):
General hydraulic systems for satisfactory operation:
Class 19/15, to ISO 4406 X=25μm (β25≧75) to ISO 4572
(2) Hydraulic systems with maximum component life and functionability:
Class 16/13, to ISO 4406 X=10μm (β10≧75) to ISO 4572
It is recommended to use return line or pressure filters.
YEOSHE Filter Division offers a wide range of these filters for all common applications and mounting styles.
The use of suction filters should be avoided, especially with fast response pumps.
Bypass filtration is a good choice for best filter efficiency.

D. Installation and mounting
Horizontal mounting:
Outlet port-side or top. Inlet port-side or bottom, drain port always uppermost.
Vertical mounting: Shaft pointing upwards.
Install pump and suction line in such way that the maximum inlet vacuum never exceeds 0.8 bar absolute.
The inlet line should be as short and as straight as possible.
A short suction line cut to 45º is recommended when the pump is mounted inside the reservoir, to improve the inlet conditions. All connections should be leak-free,otherwise the air in the suction line will cause cavitations, noise, and damage to the pump.

E. Shaft rotation and alignment
Pump and motor shafts must be aligned within 0.25mm T.I.R. maximum. A floating coupling must be used.
Bellhousings and couplings can be ordered at manufacturers listed in this catalog.
Please follow the coupling manufacturer's installation instructions.
Please consult with YEOSHE for assistance on radial load type drives.

F. Start up
Prior to start up, the pump case must be filled with hydraulic fluid (use case drain port).
Initial start up should be at zero pressure with an open circuit to enable the pump to prime.
Pressure should only be increased once the pump has been fully primed.
Attention: Check motor rotation direction.

G. Operating noise of pumps
The normal operating noise of a pump and constantly-operation noise of the entire hydraulic system is largely determined by where and how the pump is mounted and how it is connected to the down stream hydraulic system. Besides, size, style, and installation of hydraulic tube are the major influence on the overall noise emitted by a hydraulic system.

General installation information

YEOSHE

H. Noise reduction measures

Flexible elements help to prevent pump body vibration from being transmitted to other construction elements, where amplification may occur. Such elements can be:

Bell housing with elastic dampening flange with vulcanized labyrinth

(1) Floating and flexible coupling

(2) Damping rails

(3) Or silent blocks for mounting the electric motor or the foot mounting flange

(4) Flexible tube connections (compensators) or hoses on inlet, outlet, and drain port of the pump.

(5) Exclusive use of gas tight tube fittings for inlet connections to avoid ingression of air causing cavitations and excessive noise.

I. Drain line

The drain line must lead directly to the reservoir without restriction. The drain line must not be connected to any other return line.

The end of the drain line must be below the lowest fluid level in the reservoir and as far away as possible from the pump inlet line. This ensures that the pump is not empty itself when it's not in operation and the hot aireated oil will not be recirculated.

For the same reason, when the pump is mounted inside the reservoir, the drain line should be arranged in such a way that a siphon is created. This ensures that the pump is always filled with fluid.

The drain pressure must not exceed 1 bar.

Drain line length should not exceed 2 meters.

Minimum diameter should be selected according to the port size and a straight low pressure fitting with maximized bore should be used.

	PV016~PV023 PV028	PV032~PV046 PV056/PV065	PV063~092 PV110	PV125~180 PV210	PV270
Size of pipe joints	3/8"	1/2"	3/4"	1"	1-1/4"
I.D. of pipes	Ø12 more	Ø15 more	Ø19 more	Ø25 more	Ø32 more
Length of drain	Under 1m	Under 1m	Under 1m	Under 1m	Under 1m

YEOSHE BEST CHOICE Efficient Performance
Innovative Technology Reliable Quality and Service

YEOSHE

油聖液壓科技有限公司
YEOSHE HYDRAULICS TECHNOLOGY CO.,LTD.

413 台灣台中市霧峰區霧工一路68號
No.68, Wugong 1st Rd., Wufong Dist., Taichung City, Taiwan, 413
TEL +886-4-23332339 FAX +886-4-23333817 E-mail yeoshe@yeoshe.com.tw

東莞辦事處 Dongguan
CP +86-13600266957 (Miss Zhong) E-mail yeoshe@yeoshe.com.tw

上海辦事處 Shanghai
CP +86-15021931394 (Mr. Wu)
CP +86-18939716986 (Mr. Chen)

經銷商 Distributor

www.yeoshehydraulic.com